HEATER, VENTILATION & AIR CONDITIONING (HVAC)

07
SECTION

OUTLINE 07-00
ON-BOARD DIAGNOSTIC. . . . 07-02
BASIC SYSTEM 07-11
CONTROL SYSTEM 07-40

07–00 OUTLINE

HVAC ABBREVIATION 07–00–1
HVAC FEATURES 07–00–1
HVAC SPECIFICATIONS [FULL-AUTO AIR CONDITIONER] 07–00–1
HVAC SPECIFICATIONS [MANUAL AIR CONDITIONER] 07–00–3

HVAC ABBREVIATION

DPE070000000T01

A/C	Air Conditioning
BCM	Body Control Module
B+	Battery Positive Voltage
CAN	Controller Area Network
CPU	Central Processing Unit
HI	High
IG	Ignition
ISO	International Organization for Standardization
LO	Low
M	Motor
MAX	Maximum
OFF	Switch Off
ON	Switch On
PCM	Powertrain Control Module
REC	Recirculate
SW	Switch

HVAC FEATURES

DPE070000000T03

Reduced weight	• Integrated A/C unit adopted
Improved air conditioning performance	• Sub-cooling system to multi-flow condenser adopted
Improved comfort	• Air filter adopted

HVAC SPECIFICATIONS [FULL-AUTO AIR CONDITIONER]

DPE070000000T04

Basic System

Item			Specification
Heating capacity		(kW {kcal/h})	4.550 {3,913}: LF, L8 5.200 {4.472}: MZR-CD (RF Turbo)
Cooling capacity		(kW {kcal/h})	3.960 {3,406}
Refrigerant	Type		R-134a
	Regular amount (approx. quantity)	(g {oz})	500 {17.7}

Item			Specification
A/C compressor	Type		Vane-rotary
	Discharge capacity (ml {cc, fl oz})		120 {120, 4.06}
	Max. allowable speed (rpm)		7,200: LF, L8 6,400: MZR-CD (RF Turbo)
	Lube oil	Type	ATMOS GU10
		Sealed volume (approx. quantity) (ml {cc, fl oz})	150 {150, 5.07}
Condenser	Type		Multiflow (sub-cooling type)
	Radiated heat (kW {kcal/h})		6.600 {5,680}
	Receiver/drier capacity (ml {cc, fl oz})		180 {180, 6.08}
	Desiccant		Synthetic zeolite
Expansion valve	Type		Block type
Evaporator	Type		Double-tank drawn cup
Temperature control			Reheat full air mix type

Control System

Item		Specification
Airflow volume (during heater operation)	Blower motor (m^3/h)	300
Electricity consumption (during heater operation)	Blower motor (W)	256
Airflow volume (during air conditioner operation)	Blower motor (m^3/h)	450
Electricity consumption (during air conditioner operation)	Blower motor (W)	256
	Magnetic clutch (W)	49.7: LF, L8 45.0: MZR-CD (RF Turbo)
Magnetic clutch clearance (approx. quantity) (mm {in})		0.3—0.5 {0.012—0.019}
Fan type	Blower motor	Sirocco fan
Refrigerant pressure switch	Type	Triple-pressure
	Operating pressure (MPa {kgf/cm^2, psi})	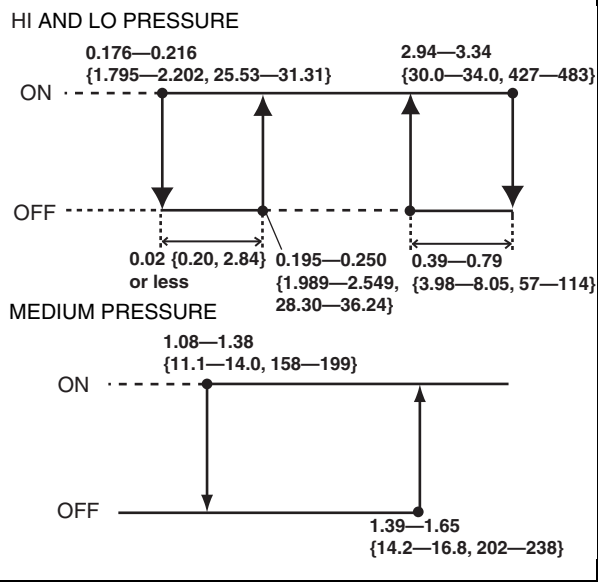

Item		Specification
Thermal protector	Type	Bimetallic (Indirect sensing type)
	Operating temperature (°C {°F})	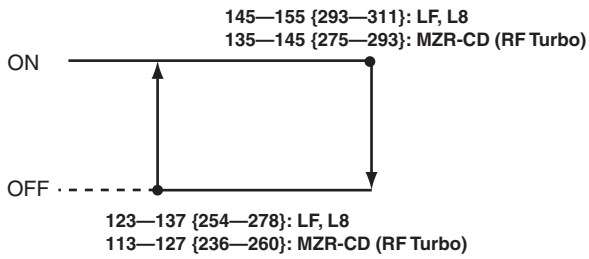
Sensor	Solar radiation sensor	Photodiode
	Ambient temperature sensor	Thermistor
	Cabin temperature sensor	
	Evaporator temperature sensor	
Actuator	Air intake actuator	Sliding contact type
	Air mix actuator	Potentiometer type
	Airflow mode actuator	

HVAC SPECIFICATIONS [MANUAL AIR CONDITIONER]

DPE070000000T05

Basic System

Item			Specification
Heating capacity		(kW {kcal/h})	4.550 {3,913}: LF, L8 5.200 {4,472}: MZR-CD (RF Turbo)
Cooling capacity		(kW {kcal/h})	3.960 {3,406}
Refrigerant	Type		R-134a
	Regular amount (approx. quantity)	(g {oz})	500 {17.7}
A/C compressor	Type		Vane-rotary
	Discharge capacity	(ml {cc, fl oz})	120 {120, 4.06}
	Max. allowable speed	(rpm)	7,200: LF, L8 6,400: MZR-CD (RF Turbo)
	Lube oil — Type		ATMOS GU10
	Lube oil — Sealed volume (approx. quantity)	(ml {cc, fl oz})	150 {150, 5.07}
Condenser	Type		Multiflow (sub-cooling type)
	Radiated heat	(kW {kcal/h})	6.600 {5,680}
	Receiver/drier capacity	(ml {cc, fl oz})	180 {180, 6.08}
	Desiccant		Synthetic zeolite
Expansion valve	Type		Block type
Evaporator	Type		Double-tank drawn cup
Temperature control			Reheat full air mix type

Control System

Item			Specification
Airflow volume (during heater operation)	Blower motor	(m^3/h)	300
Electricity consumption (during heater operation)	Blower motor	(W)	256
Airflow volume (during air conditioner operation)	Blower motor	(m^3/h)	450
Electricity consumption (during air conditioner operation)	Blower motor	(W)	256
	Magnetic clutch	(W)	49.7: LF, L8 45.0: MZR-CD (RF Turbo)
Magnetic clutch clearance		(mm {in})	0.3—0.5 {0.012—0.019}

Item		Specification
Fan type	Blower motor	Sirocco fan
Refrigerant pressure switch	Type	Triple-pressure
	Operating pressure (MPa {kgf/cm^2, psi})	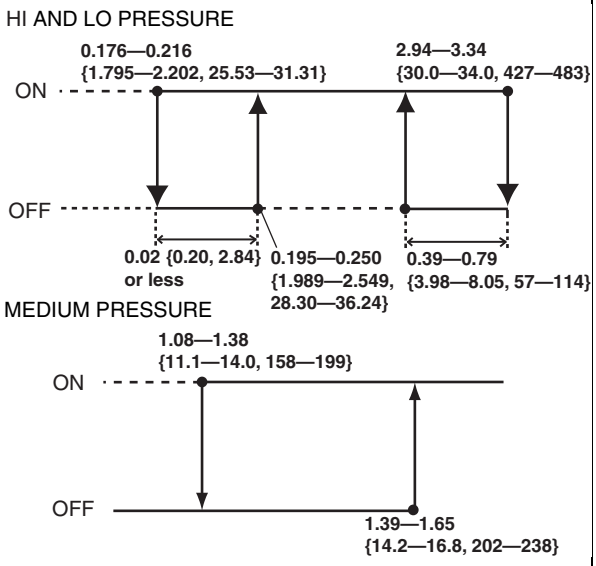
Thermal protector	Type	Bimetallic (Indirect sensing type)
	Operating temperature (°C {°F})	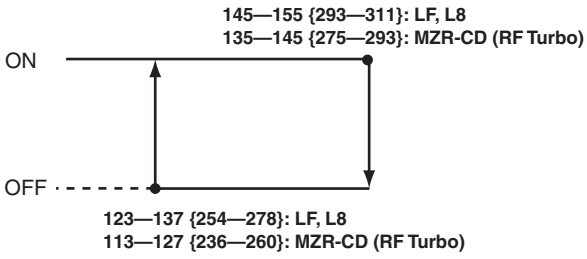
Sensor	Evaporator temperature sensor	Thermistor
Actuator	Air intake actuator	Sliding contact type

07–02 ON-BOARD DIAGNOSTIC

ON-BOARD DIAGNOSTIC FUNCTION OUTLINE 07–02–1
ON-BOARD DIAGNOSTIC FUNCTION BLOCK DIAGRAM 07–02–1
ON-BOARD DIAGNOSTIC FUNCTION 07–02–1
DLC-2 CONSTRUCTION 07–02–4

ON-BOARD DIAGNOSTIC FUNCTION OUTLINE

DPE070261199T01

Features

- Includes the on-board diagnostic function and A/C operation check mode. The on-board diagnostic function consists of a malfunction detection function that detects malfunctions in input/output signals, a memory function that stores detected malfunctions, a fail-safe function that prevents an operating malfunction of output parts where a malfunction is detected, and a malfunction display function that displays detected malfunctions.
- The malfunction display function and output device operation function is accessed by connecting the WDS or equivalent to the DLC-2.

ON-BOARD DIAGNOSTIC FUNCTION BLOCK DIAGRAM

DPE070261199T02

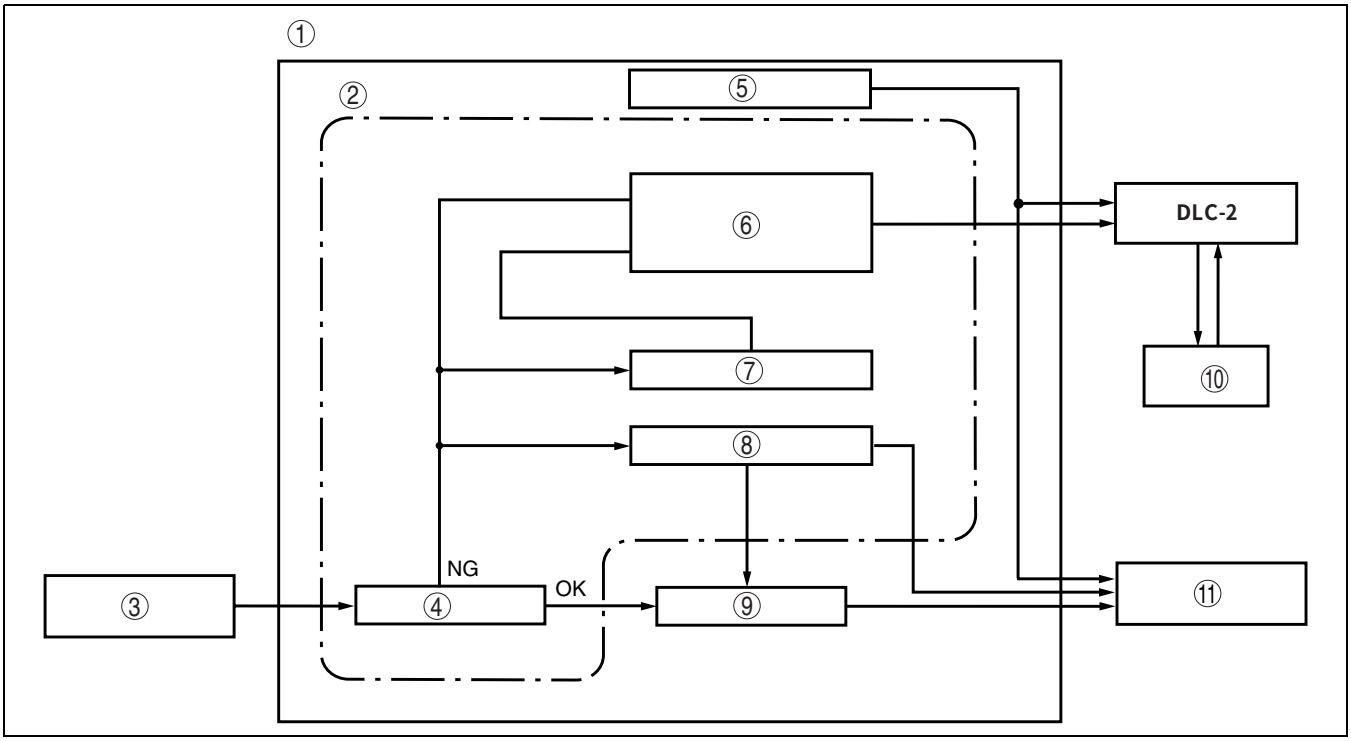

DPE702ZT1101

1	Climate control unit
2	On-board diagnostic function
3	Input device
4	Malfunction detection function
5	Output device operation function
6	Malfunction display function

7	Memory function
8	Fail-safe function
9	Normal control
10	WDS or equivalent
11	Output device

ON-BOARD DIAGNOSTIC FUNCTION

DPE070261199T03

Malfunction detection function

- Detects errors in the input and output signals. (The ignition switch is at the ON position or the engine is running.)
- If a malfunction is detected, a DTC is output to the DLC-2 through the malfunction display function. At the same time, malfunction detection results are sent to the fail-safe and memory functions.

Fail-safe function

- If a malfunction is detected by the malfunction detection function and a malfunction is determined, the following

controls are performed to prevent an operating malfunction of the full-auto air conditioner and malfunction of output parts.

Fail-safe Function Table

Part where malfunction is determined	Malfunction determined when IG SW at ON	Malfunction already exists when IG SW turned to ON
Cabin temperature sensor	Cabin temperature sensor input value is fixed at the value right before the malfunction.	Cabin temperature sensor input value is fixed at **25 °C {77 °F}**.
Ambient temperature sensor	Ambient temperature sensor input value is fixed at the value right before the malfunction.	Ambient temperature sensor input value is fixed at **15 °C {59 °F}**.
Evaporator temperature sensor	Evaporator temperature sensor input value is fixed at **0 °C {32 °F}**.	←
Solar radiation sensor	Solar radiation sensor value is fixed at the value right before the malfunction.	Solar radiation sensor value is fixed at **0 W/m^2**.
Engine coolant temperature sensor	Engine coolant temperature sensor input value is fixed at **85 °C {185 °F}**.	←
Air mix actuator (potentiometer)	Air mix actuator drive signal is stopped right when the malfunction is determined. However, it is fixed at MAX COLD when the manually set temperature is at **15.0** and fixed at MAX HOT when the manually set temperature is at **29.0**.	Control based on ambient temperature. (See Graph 1.) However, it is fixed at MAX COLD when the manually set temperature is at **15.0** and fixed at MAX HOT when the manually set temperature is at **29.0**.
Airflow mode actuator (potentiometer)	Airflow mode actuator drive signal is stopped right when the malfunction is determined. • However, for manual operation using the MODE switch, only vent mode is operable. • The defroster switch is operable.	Control based on ambient temperature. (See Graph 2.) • However, for manual operation using the MODE switch, only vent mode is operable. • The defroster switch is operable.
Air mix actuator (motor lock)	Air mix actuator drive signal is stopped right when the malfunction is determined. After this, a drive signal is output to the air mix actuator and malfunction determination is performed **approx. every 5 min**.	After the IG SW is at ON, the air mix actuator drive signal is again output normally. After this, a drive signal is output to the air mix actuator and malfunction determination is performed **approx. every 5 min**.
Airflow mode actuator (motor lock)	Airflow mode actuator drive signal is stopped right when the malfunction is determined. After this, a drive signal is output to the airflow mode actuator and malfunction determination is performed **approx. every 5 min**.	After the IG SW is at ON, the airflow mode actuator drive signal is again output normally. After this, a drive signal is output to the airflow mode actuator and malfunction determination is performed **approx. every 5 min**.

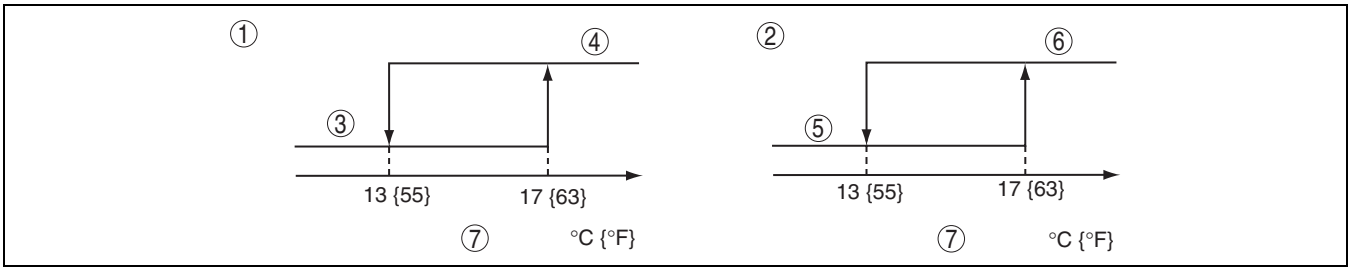

B3E0702T002

1	Graph 1
2	Graph 2
3	MAX HOT
4	MAX COLD

5	DEFROSTER
6	VENT
7	Ambient temperature

Sensor Signal Delay Function

- Due to factors such as direct and intermittent sunlight (travelling through a city or highway tunnel), or radiant heat from the ground under a parked vehicle as well as the opening and closing of doors, the amount of solar radiation, and the ambient and cabin temperatures may change intermittently, partially, or suddenly. If control was performed based exactly on these variations, the air conditioning function would be negatively effected and smooth control could not occur. In order to prevent this, the climate control unit delays the input signals for solar radiation, and the ambient and cabin temperature as shown in the following figure. Stable control occurs due to the reading out of an average of all the variations.
- When the engine is re-started after being temporarily stopped, the ambient temperature sensor may detect a temperature higher then the actual ambient temperature. To prevent this, when the engine coolant temperature exceeds **55 °C {131 °F}**, the detected ambient temperature is corrected based on the data for the ambient

temperature before the engine was stopped that is stored in climate control unit and control is performed accordingly.

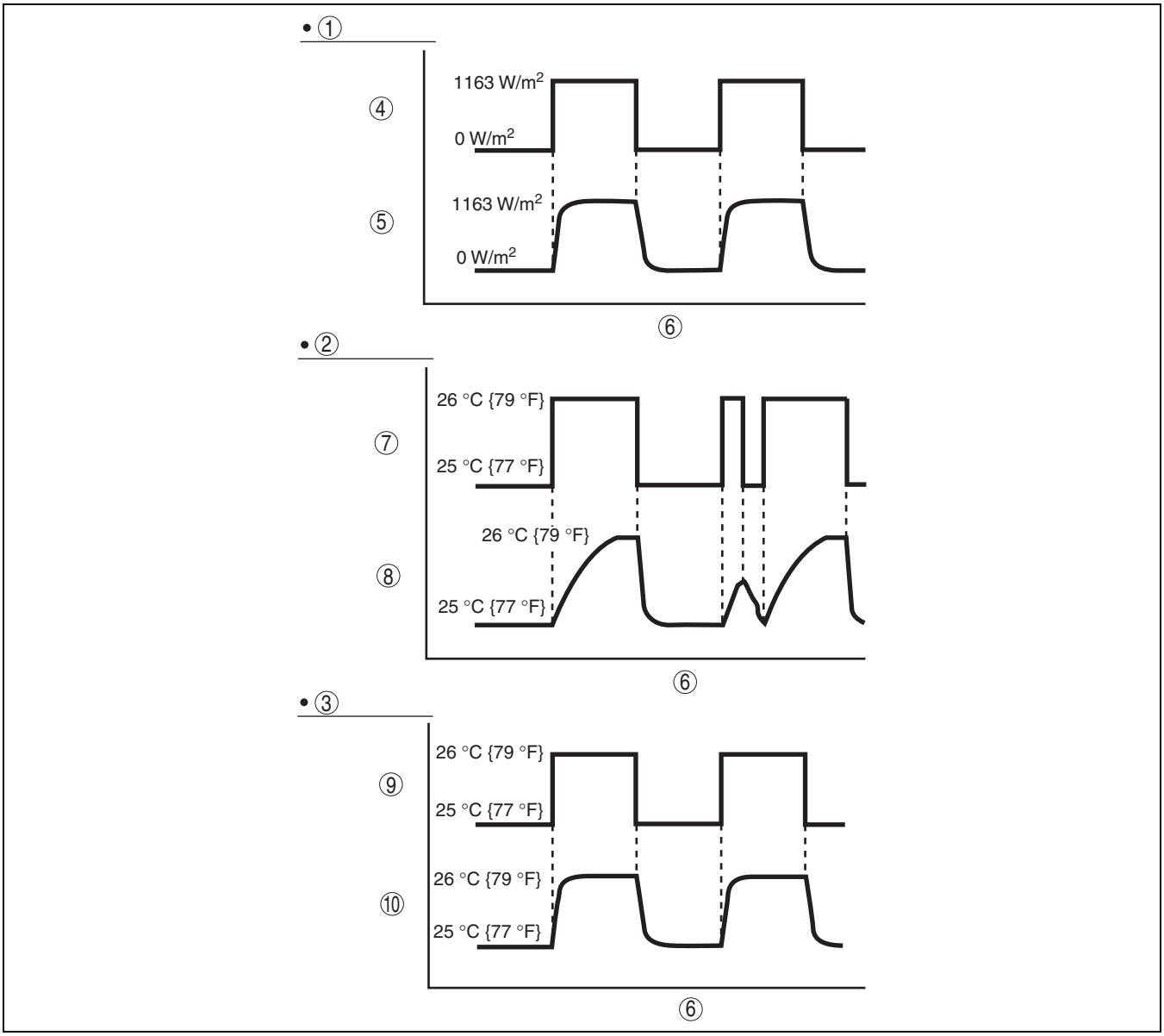

B3E0702T004

1	Solar radiation delay
2	Ambient temperature delay
3	Cabin temperature delay
4	(Example) Actual solar radiation variation
5	Delayed solar radiation determination by climate control unit

6	Time
7	(Example) Actual ambient temperature variation
8	Delayed ambient temperature determination by climate control unit
9	(Example) Actual cabin temperature variation
10	Delayed cabin temperature determination by climate control unit

Memory Function

- Stores the signal determined to be malfunctioning by the malfunction detection function, and the memory is not cleared even if the ignition switch is turned off (LOCK position) or the malfunction has been repaired.
- Clear stored malfunction data by connecting the WDS or equivalent to the DLC-2.

Display Function

- This function is for outputting present or past malfunctions via the DLC-2 as DTCs.
- DTCs output via the DLC-2 can be read out using the WDS or equivalent.

Malfunction Display Mode

- Present and past malfunctions in the control system circuits (open/short circuits) are detected, and the DTCs indicated in the table are displayed on the WDS or equivalent. Since once a past malfunction is stored, it will remain stored even after the malfunction has been repaired, clear past malfunctions after completing repairs.

- Clear stored past malfunctions by connecting the WDS or equivalent to the DLC-2.

DTC Table

DTC	Malfunction location	Detected condition	Memory function
B1251	Cabin temperature sensor	Cabin temperature sensor circuit open	X
B1253		Cabin temperature sensor circuit short (body ground)	X
B1255	Ambient temperature sensor	Ambient temperature sensor circuit open	X
B1257		Ambient temperature sensor circuit short (body ground)	X
B1260	Solar radiation sensor	Solar radiation sensor circuit short (power supply)	X
B1261		Solar radiation sensor circuit short (body ground)	—
B1274	Airflow mode actuator (potentiometer)	Airflow mode actuator (potentiometer) circuit short (power supply)	X
B1275		Airflow mode actuator (potentiometer) circuit short (body ground)	X
B1282	Air mix actuator (potentiometer)	Air mix actuator (potentiometer) circuit short (power supply)	X
B1283		Air mix actuator (potentiometer) circuit short (body ground)	X
B1947	Evaporator temperature sensor	Evaporator temperature sensor circuit short (body ground)	X
B2014		Evaporator temperature sensor circuit open	X
B2832	Airflow mode actuator (motor lock)	Airflow mode actuator motor lock	X
B2834	Air mix actuator (motor lock)	Air mix actuator motor lock	X
U0140	CAN communication system	Reception error in signal from BCM	X
U0155		Reception error in signal from ICM (HEC)	X
U0516		BUS OFF error	X

A/C Operation Check Mode

- The climate control unit forces operation of output related moving parts as indicated in the operation check table regardless of input related parts, while simultaneously changing the display on the information display as well as illuminating each switch indicator light automatically. A malfunctioning part can be determined by verifying that each transition is as indicated in the operation check table through visual inspection, listening to the operation sound, or placing a hand on the air vent.

WDS or equivalent display	Target part	Operation condition	Monitor display*
All indicator light illumination verification	Climate control unit	All A/C indicator lights illuminated	All illuminated
Blower motor speed	Blower motor	OFF→1ST→2ND→3RD→4TH→5TH→6TH→7TH	1
Air mix door opening angle	Air mix door	0 %→50 %→100 %→50 %	20.0 (0%) 20.5 (50%) 21.0 (100%) 20.5 (50%)
Airflow mode door switching	Airflow mode door	VENT→BI-LEVEL→HEAT→HEAT/DEF→DEFROSTER	3
Air intake door switching (A/C compressor)	Air intake door A/C compressor	FRESH ⇔ REC ON ⇔ OFF	4

* : Shown on the information display (at the set temperature display) according to each WDS or equivalent display.

DLC-2 CONSTRUCTION

DPE070261199T04

Features

Outline

- A connector (DLC-2) conforming to International Organization for Standardization (ISO) standards has been

added.
- Communication using the DLC-1 FEN terminal has been eliminated. Due to this, DTCs cannot be read out using a disc monitor or circuit tester.

DLC-2
- Shape and terminal arrangement as stipulated by the ISO international standard has been adopted for this connector. The connector has a 16-pin construction that includes the CAN_H, CAN_L, GND1, GND2 and B+ terminals.

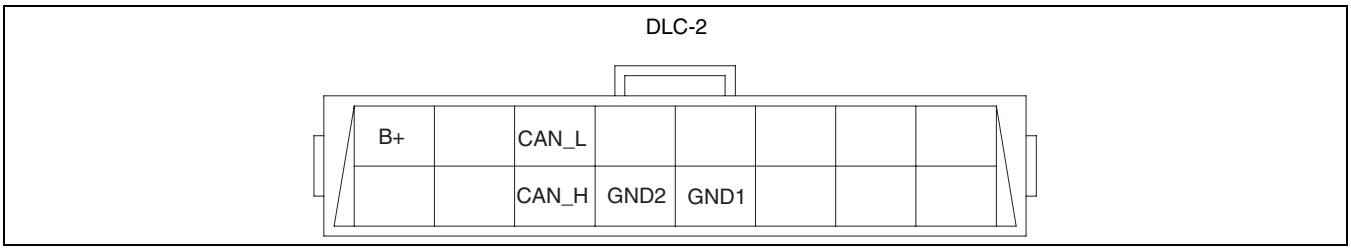

B3E0402T003

Terminal	Function
CAN_L	Serial communication terminal (LO)
CAN_H	Serial communication terminal (HI)
GND1	Body GND terminal
GND2	Serial communication GND terminal
B+	Battery power supply terminal

07–11 BASIC SYSTEM

BASIC SYSTEM LOCATION INDEX. . . . 07–11–1
A/C UNIT CONSTRUCTION/
OPERATION 07–11–4
AIR FILTER FUNCTION 07–11–8
A/C COMPRESSOR CONSTRUCTION . . 07–11–9
CONDENSER CONSTRUCTION 07–11–9
REFRIGERANT LINE
CONSTRUCTION 07–11–10

BASIC SYSTEM LOCATION INDEX

DPE071100000T03

Ventilation System

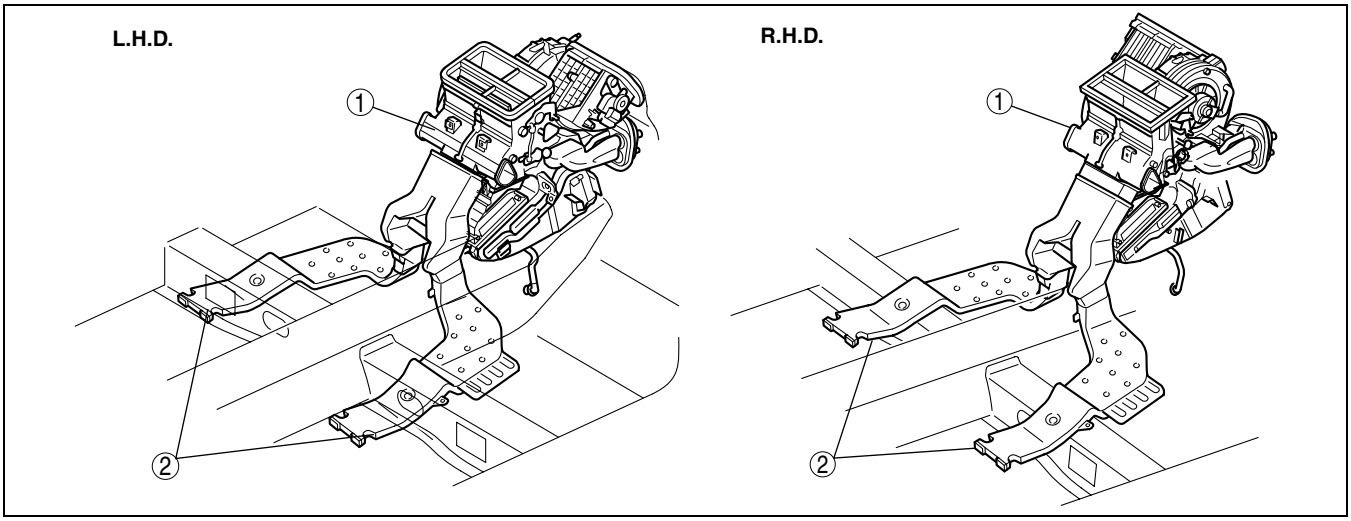

DPE711ZT1001

1	A/C unit
2	Rear heat duct

Refrigerant System

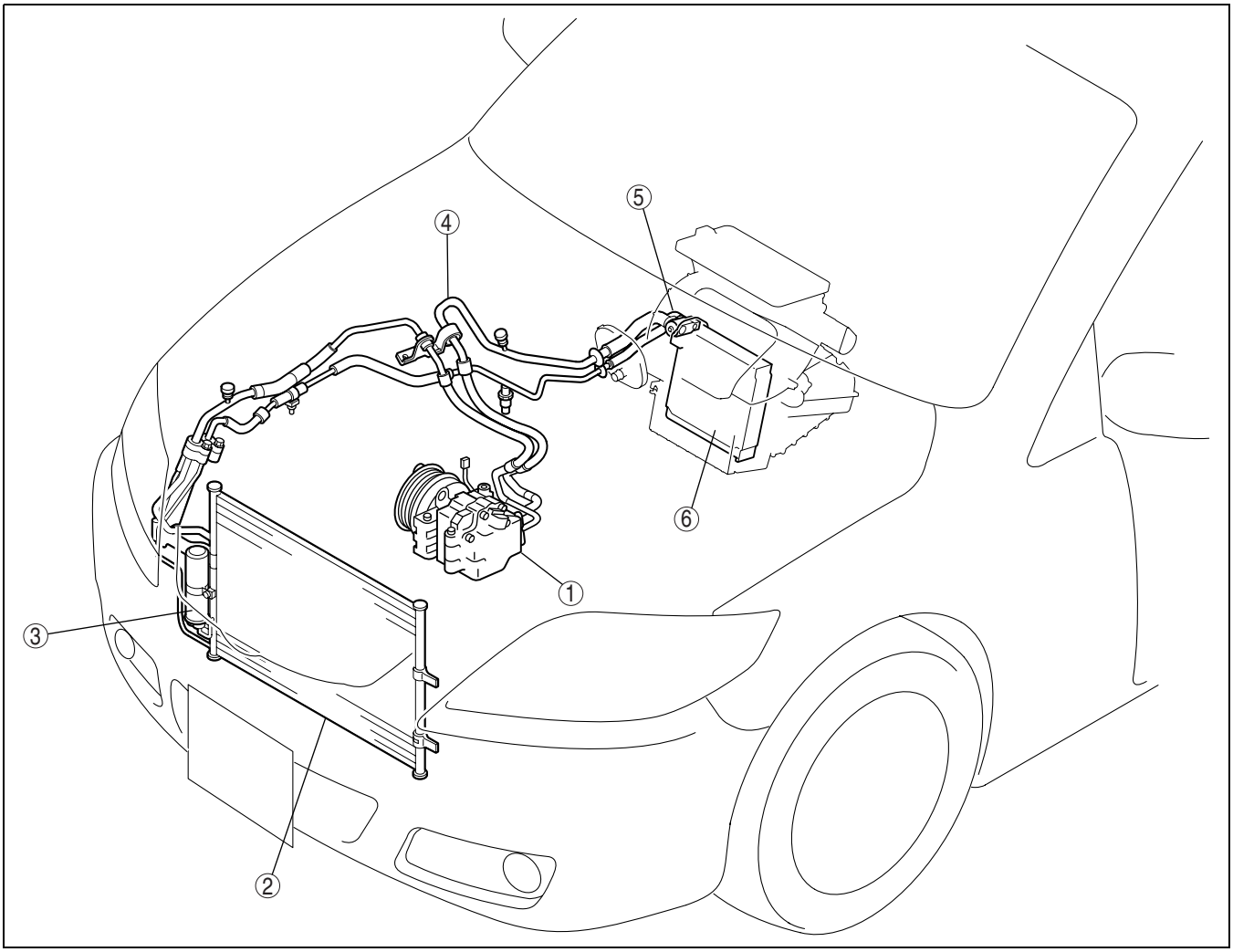

DPE711ZT1105

1	A/C compressor
2	Condenser
3	Receiver/drier

4	Refrigerant line
5	Expansion valve
6	Evaporator

Ventilation System

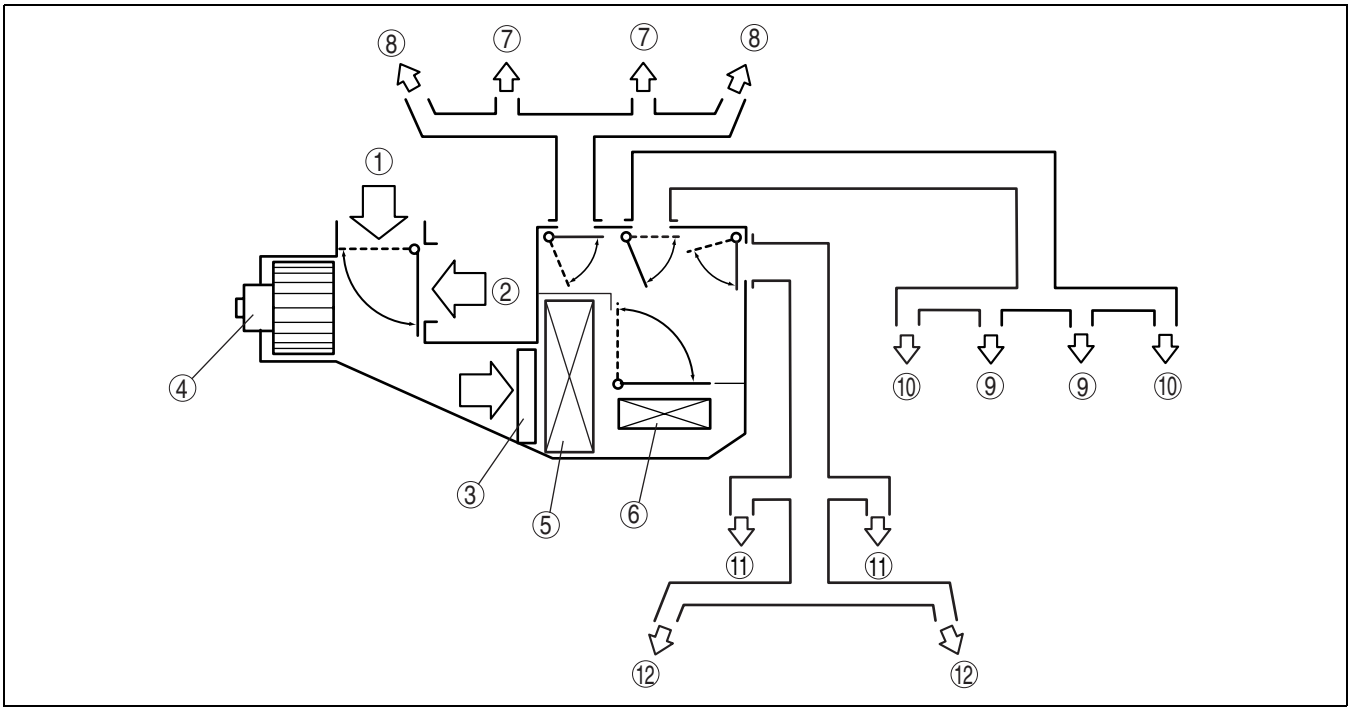

B3E0711T002

1	Fresh
2	Recirculate
3	Air filter
4	Blower motor
5	Evaporator
6	Heater core

7	Defroster
8	Side demister
9	Center vent
10	Side vent
11	Front heat
12	Rear heat

Refrigerant System

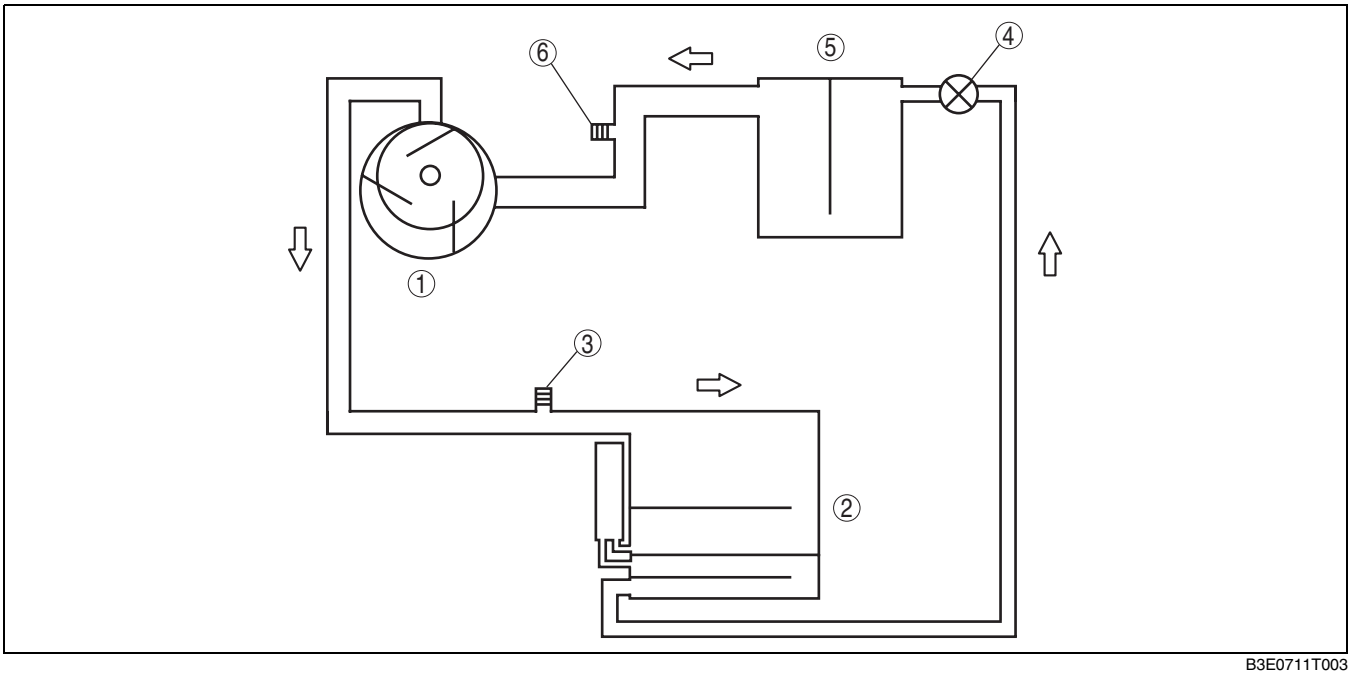

B3E0711T003

1	A/C compressor
2	Condenser
3	High-pressure charging valve

4	Expansion valve
5	Evaporator
6	Low-pressure charging valve

A/C UNIT CONSTRUCTION/OPERATION

DPE071161133T01

- The A/C unit which integrates the blower, cooling and heater units has been adopted.

Construction

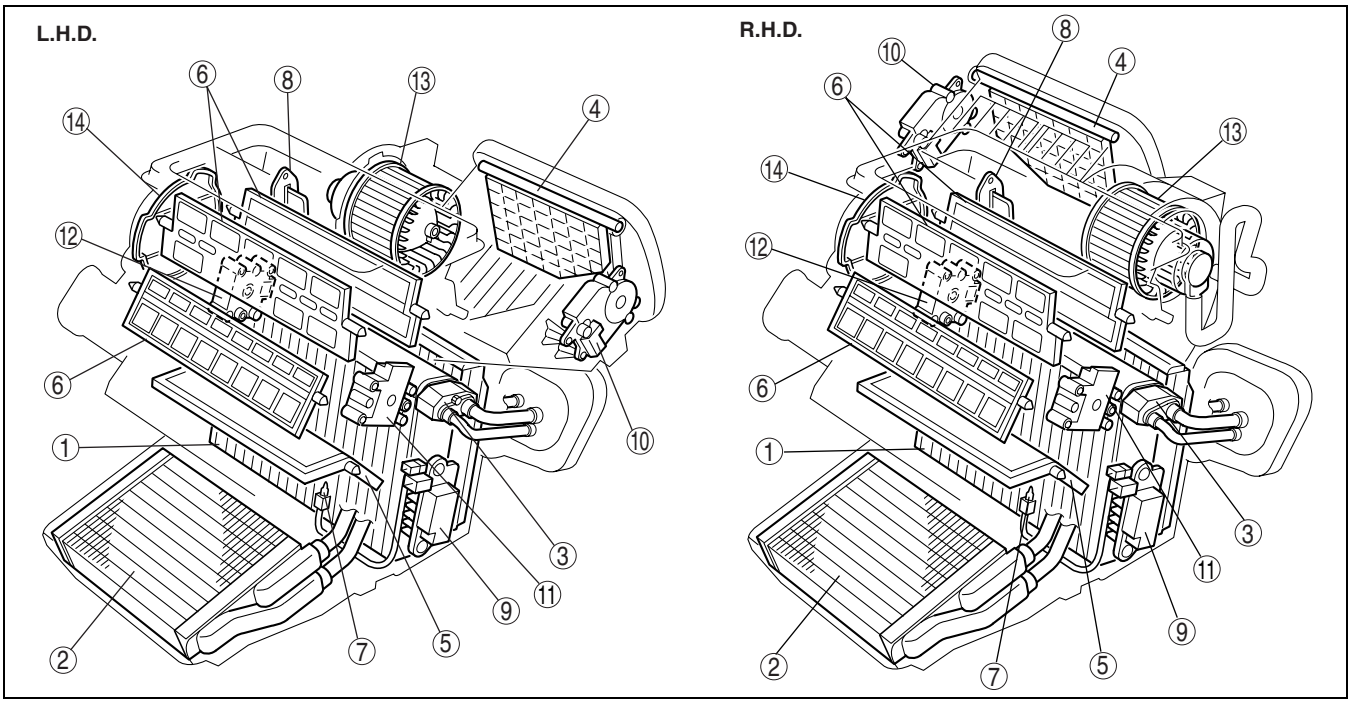

B3E0711T402

1	Evaporator
2	Heater core
3	Expansion valve
4	Air intake door
5	Air mix door
6	Airflow mode door
7	Evaporator temperature sensor
8	Resistor (manual air conditioner)
9	Power MOS FET (full-auto air conditioner)
10	Air intake actuator
11	Air mix actuator (full-auto air conditioner)
12	Airflow mode actuator (full-auto air conditioner)
13	Blower motor
14	Airflow mode main link

Evaporator

- The double-tank drawn cup is the same as the previous model except that a new refrigerant flow pattern has been adopted. Due to this, size and weight reduction is achieved while maintaining performance.

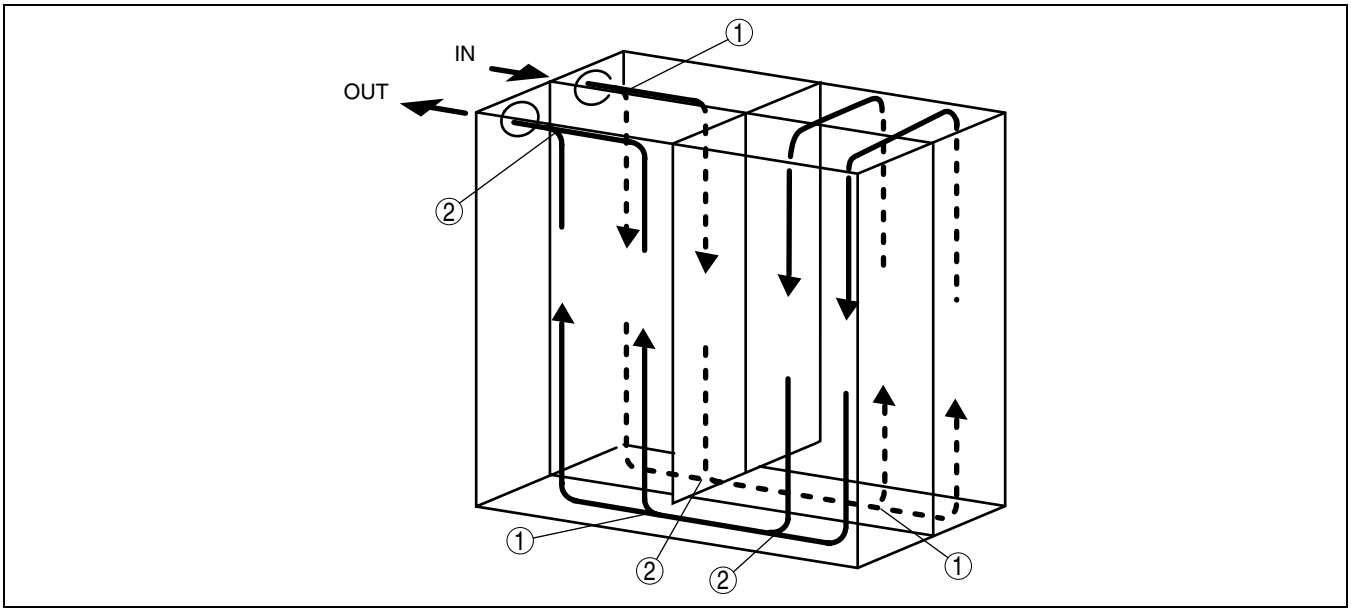

DPE711ZT1106

1	Separation part

2	Rejoining point

Expansion valve

- The expansion valve causes a sudden decrease in the pressure of the liquid refrigerant. This atomizes the refrigerant, making it easier for the evaporator to vaporize it. The expansion valve also regulates the flow volume of the refrigerant sent to the evaporator.
- The amount of refrigerant delivered to the evaporator is adjusted by the opening angle of the ball valve in the expansion valve.
- Opening angle is adjusted by a balance of the R-134a pressure (Pd) in the diaphragm, and a composite force of evaporator discharge pressure (PI) against the lower part of the diaphragm and spring force (Fs) pushing up the ball valve. When PI increases, the temperature of the temperature sensor near the diaphragm rises and the Pd heated by the R-134a in the diaphragm increases. When the Pd increases more than PI + Fs, the diaphragm is pushed down, and the shaft attached to end of the temperature sensor rod pushes down the ball valve, increasing the amount of liquid refrigerant flow. When the evaporator discharge refrigerant temperature decreases, PI + Fs increases more than Pd, the ball valve is pushed up, and the amount of liquid refrigerant flow decreases.

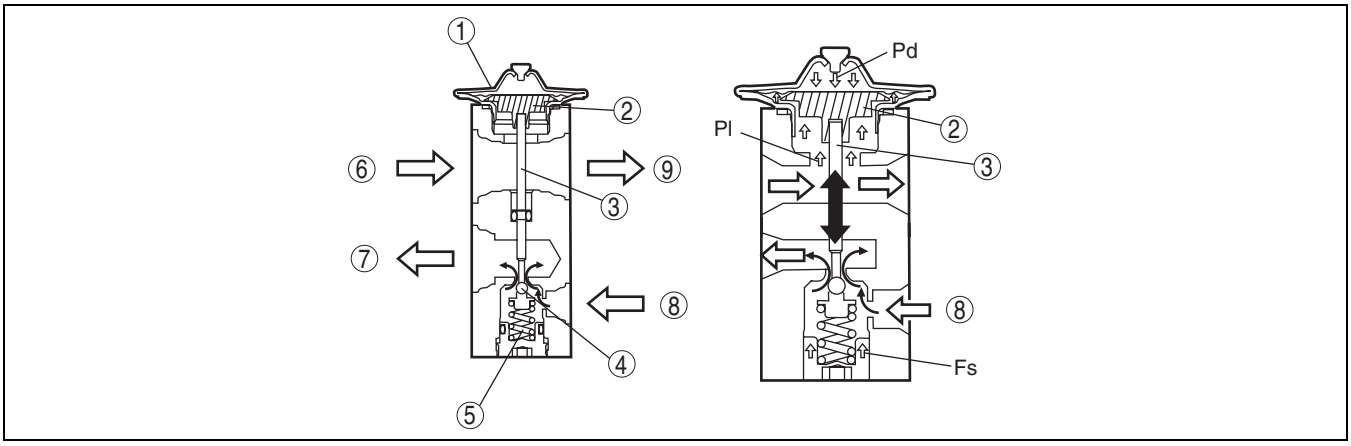

DPE711ZT1107

1	Diaphragm
2	Temperature sensor
3	Shaft
4	Ball valve
5	Spring

6	From evaporator
7	To evaporator
8	From condenser
9	To condenser

Operation

Air Mix Door Operation

- The air mix door, installed in the A/C unit, controls HOT or COLD position, depending on the position of the temperature control dial. As a result, airflow distribution changes, and the airflow temperature is controlled.

L.H.D.

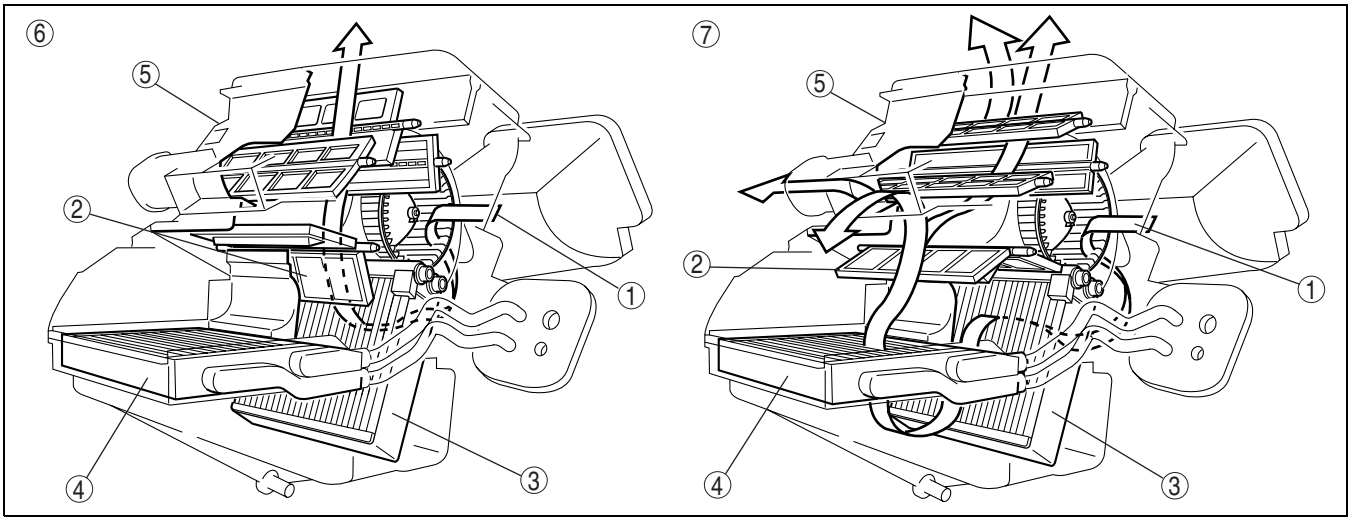

B3E0711T006

R.H.D.

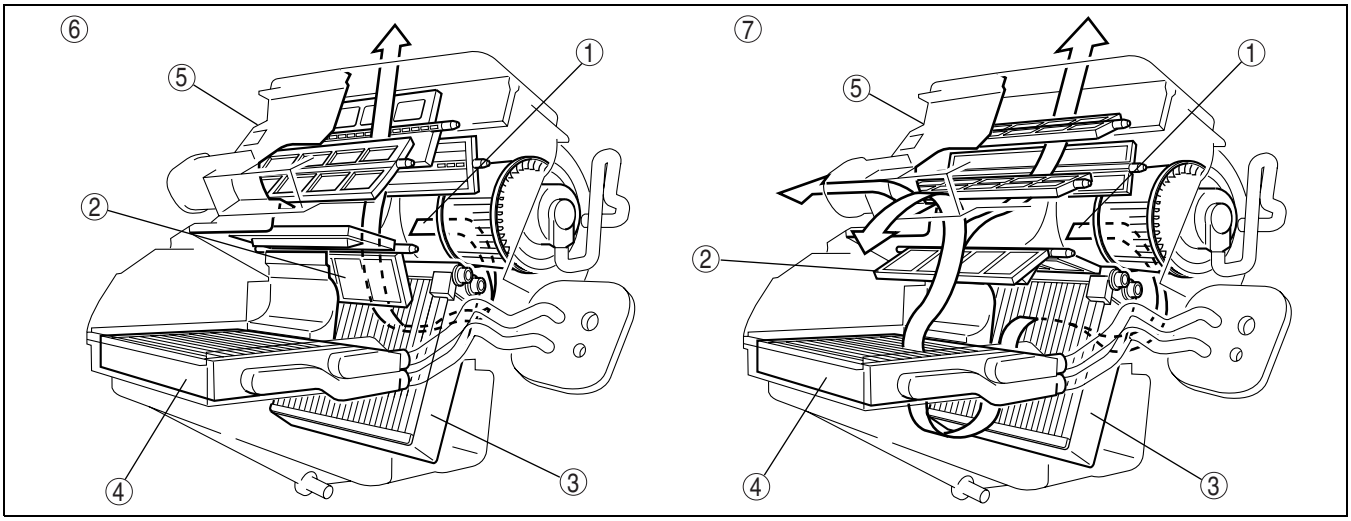

B3E0711T403

1	Airflow
2	Air mix door
3	Evaporator
4	Heater core

5	A/C unit
6	COLD
7	HOT

Airflow Mode Door Operation

- The airflow mode doors move to VENT, BI-LEVEL, HEAT, HEAT/DEF, or DEFROSTER position, depending on the position of the airflow mode selector dial. As a result, airflow mode changes.

L.H.D.

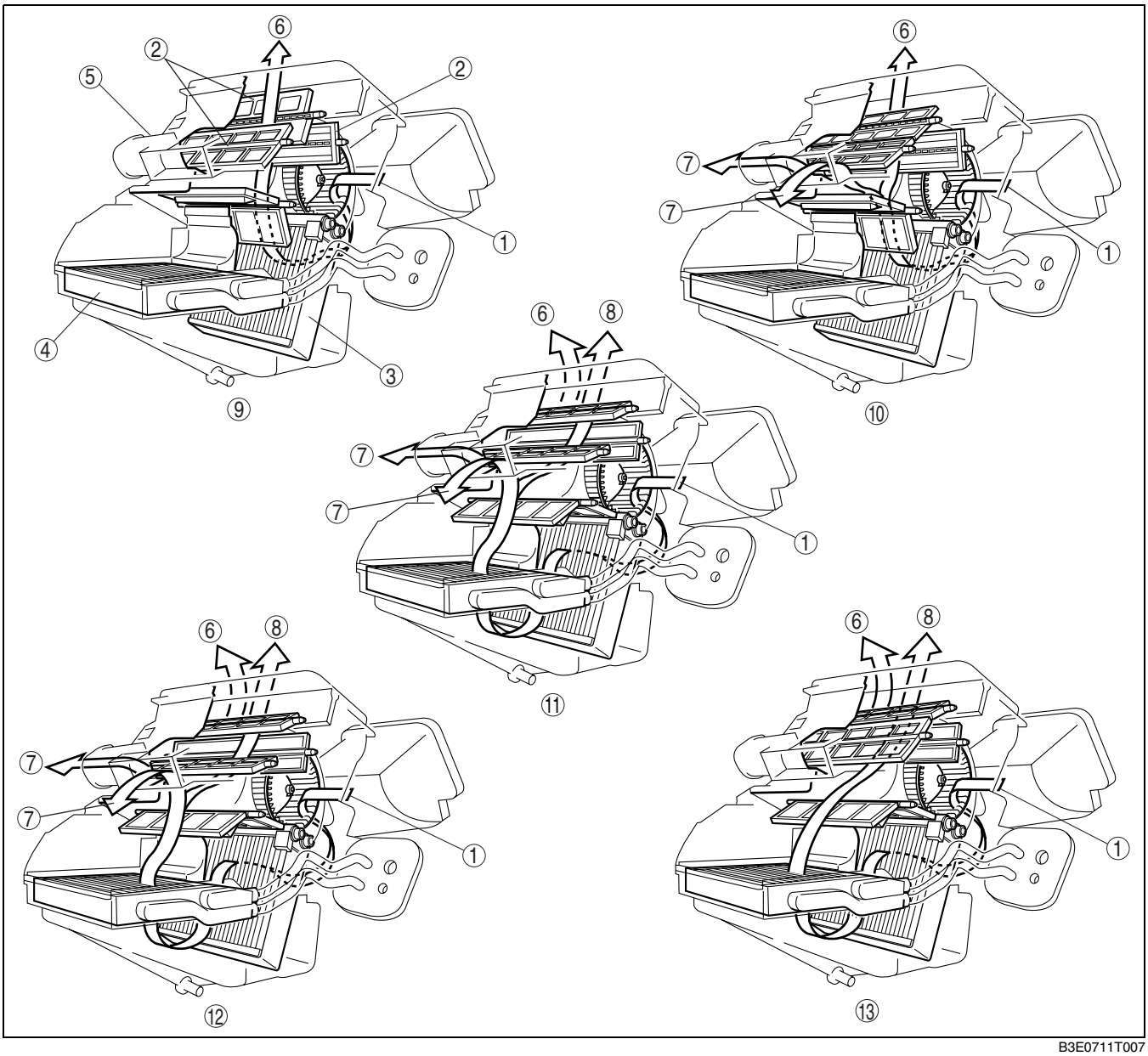

B3E0711T007

R.H.D.

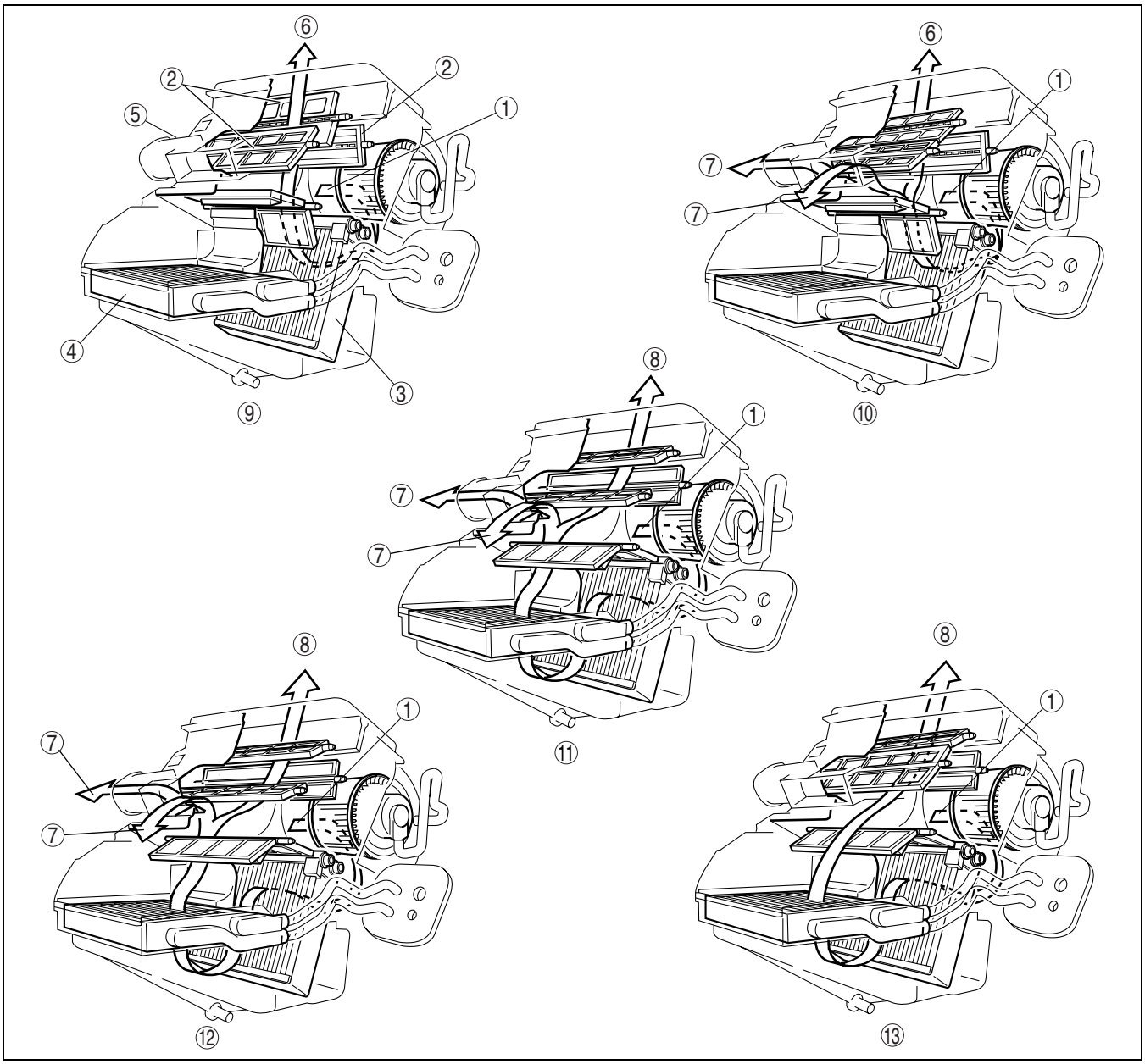

DPE711ZT1101

1	Airflow
2	Airflow mode door
3	Evaporator
4	Heater core
5	A/C unit
6	To center and side vent
7	To front and rear heat

8	To defroster and side demister
9	VENT
10	BI-LEVEL
11	HEAT
12	HEAT/DEF
13	DEFROSTER

AIR FILTER FUNCTION

DPE071161142T01

- An air filter that can removes pollen and dust has been adopted.
- The dust filter removes pollen and dust.
- The air filter cannot be reused and must be replaced periodically.

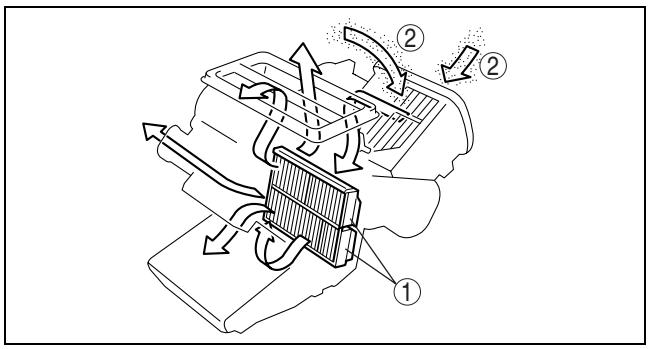

DPE711ZT1102

1	Air filter
2	Pollen and dust

A/C COMPRESSOR CONSTRUCTION

DPE071161450T01

Construction

- Consists of the following parts:

1	Magnetic clutch
2	Thermal protector
3	A/C compressor

- A rotary-vane type (H12A1) A/C compressor body has been adopted for size, weight, and operation vibration reduction.

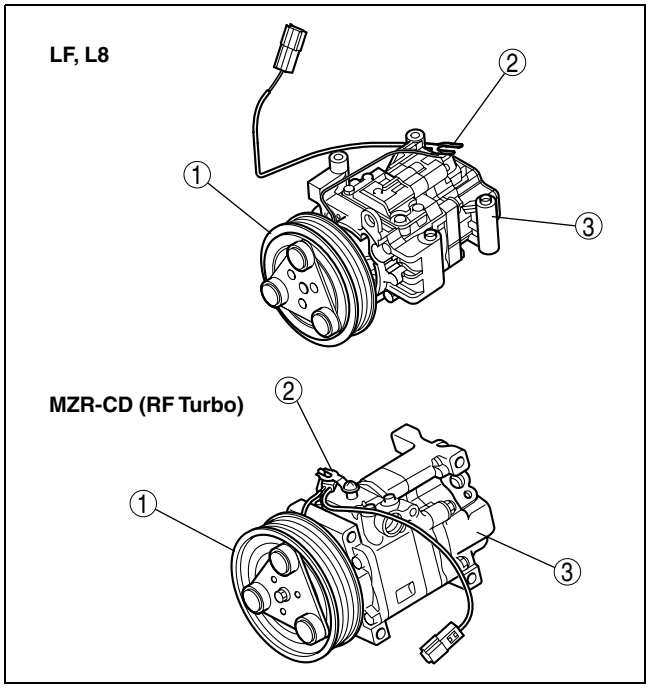

DPE711ZT1002

CONDENSER CONSTRUCTION

DPE071161480T01

- A sub cool condenser has been adopted. It is a multi-flow condenser which is equipped with a sub cooling part and integrated with a receiver/drier.
- The sub cool condenser separates liquid-gas refrigerant initially cooled at the condenser via the receiver/drier, where it returns again to the condenser sub cooling part and is cooled, accelerating liquefaction and improving cooling capacity.

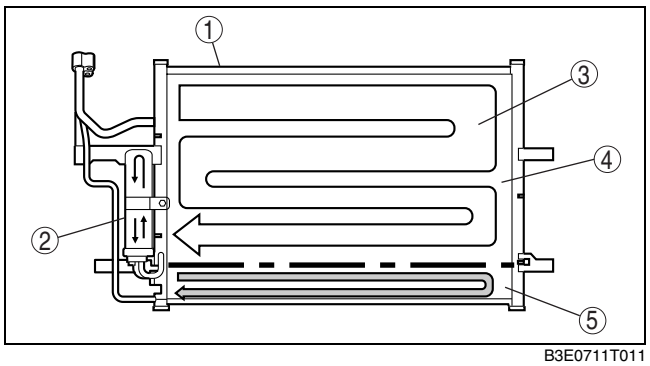

B3E0711T011

1	Condenser
2	Receiver/drier
3	Refrigerant flow
4	Cooling part
5	Sub cooling part

REFRIGERANT LINE CONSTRUCTION

DPE071161460T01

Construction

- The pipes in the refrigerant lines are made of aluminum alloy and the hoses are made of rubber (flexible hose).
- A high-pressure charging valve is located on the cooler hose (HI) and a low-pressure charging valve is located on the cooler hose (LO) (LF, L8), cooler pipe No.2 (MZR-CD (RF Turbo)).

LF, L8

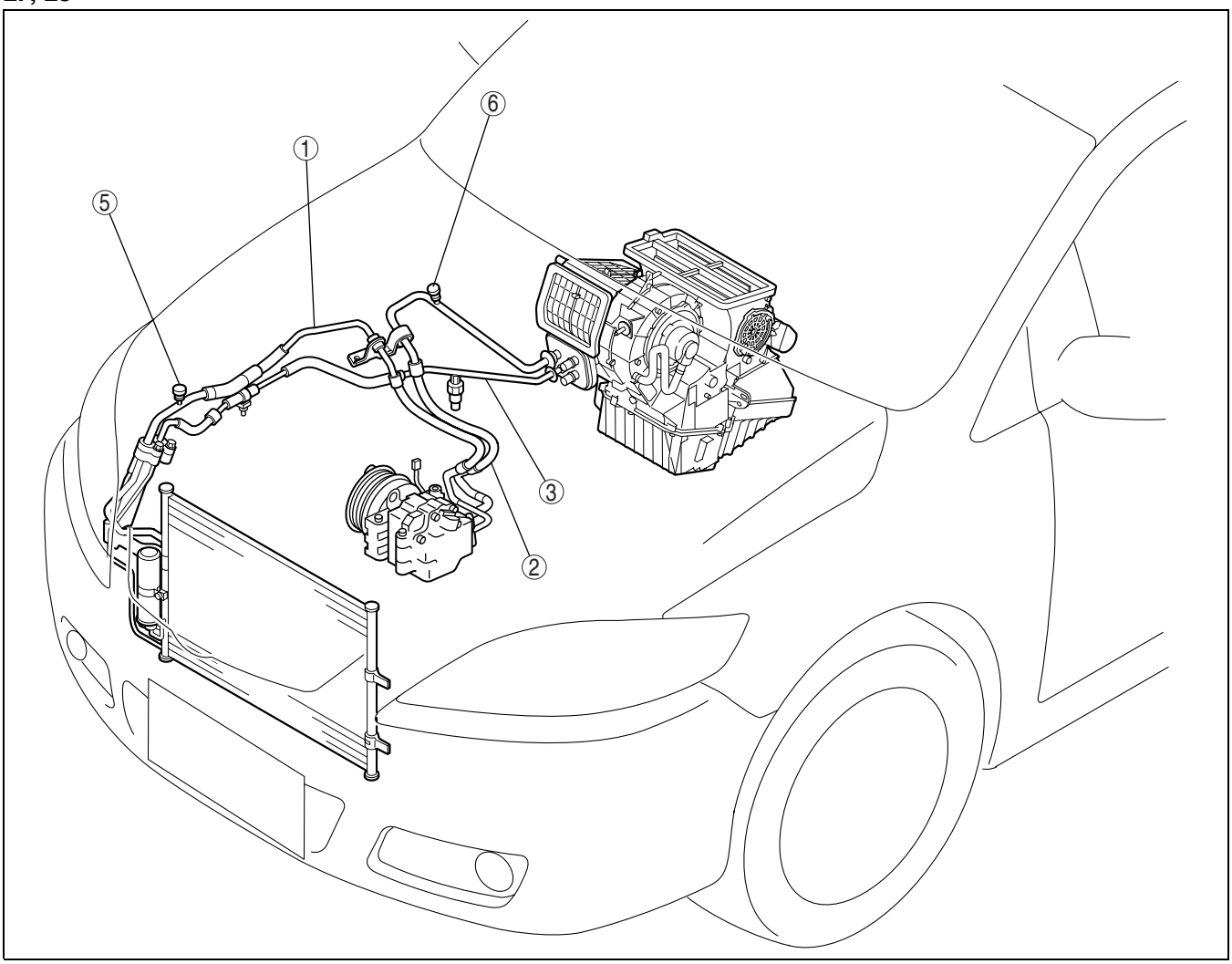

DPE711ZT1003

MZR-CD (RF Turbo)

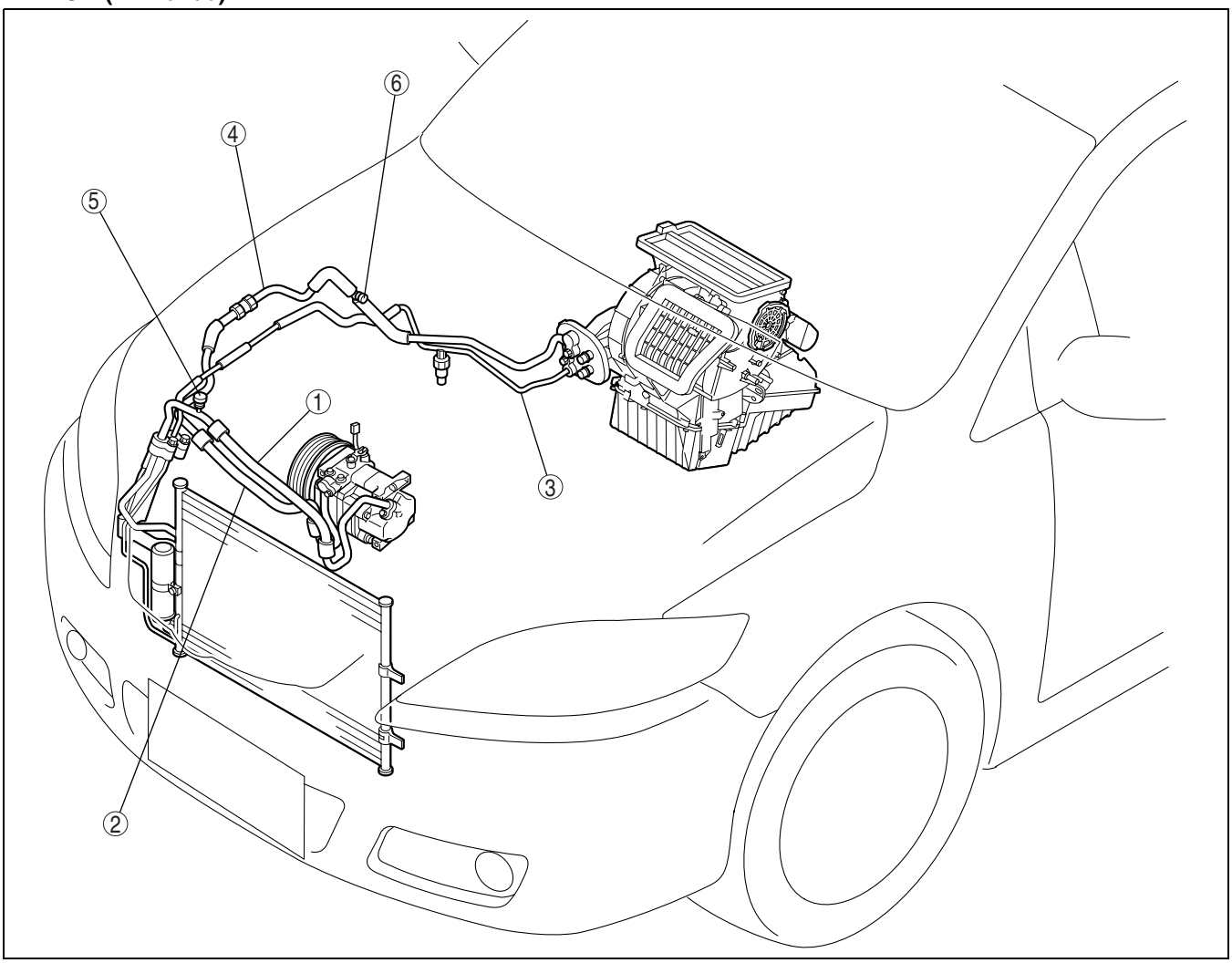

DPE711ZT1004

1	Cooler hose (HI)
2	Cooler hose (LO)
3	Cooler pipe No.1

4	Cooler pipe No.2 (MZR-CD (RF Turbo))
5	High-pressure charging valve
6	Low-pressure charging valve

Spring-lock Coupling (LF, L8)

- Spring-lock coupling is used for pipe-to-pipe connections. As a result, pipes can be connected easily, maintenance of torque is unnecessary, and serviceability is improved.
- There is a garter spring in the cage on the male side (cooler pipe or cooler hose (LO)) of spring-lock coupling type and the end of the pipe on the female side (A/C unit) is flared. When the pipes are being connected, the flared end of the female side forces the garter spring on the female side to expand, and by fully inserting the male side into the female side, the flared end is locked by the garter spring. When the cooler pipe or cooler hose (LO) is replaced, the additional indicator ring comes out after connecting, indicating that the flared end is locked.

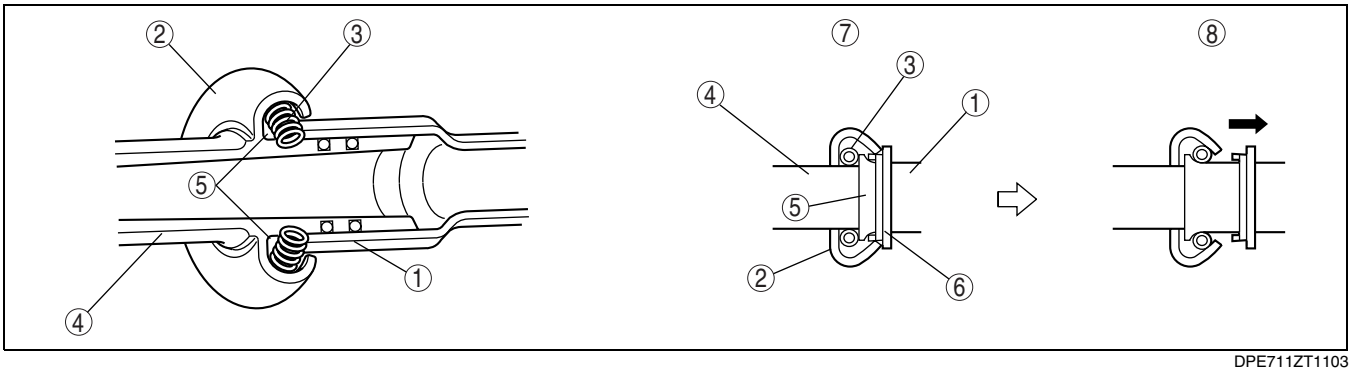

DPE711ZT1103

1	Female side
2	Cage
3	Garter spring
4	Male side

5	Flared end
6	Indicator ring
7	Unlocked
8	Locked

07–40 CONTROL SYSTEM

CONTROL SYSTEM OUTLINE 07–40–1
CONTROL SYSTEM LOCATION INDEX [FULL-AUTO AIR CONDITIONER] 07–40–2
CONTROL SYSTEM LOCATION INDEX [MANUAL AIR CONDITIONER] 07–40–3
CONTROL SYSTEM WIRING DIAGRAM [FULL-AUTO AIR CONDITIONER] 07–40–5
CONTROL SYSTEM WIRING DIAGRAM[MANUAL AIR CONDITIONER] 07–40–6
AIR INTAKE ACTUATOR CONSTRUCTION 07–40–6
AIR MIX ACTUATOR CONSTRUCTION 07–40–7
AIRFLOW MODE ACTUATOR CONSTRUCTION 07–40–7
BLOWER MOTOR CONSTRUCTION . . . 07–40–7
POWER MOS FET FUNCTION 07–40–8
RESISTOR CONSTRUCTION 07–40–9
MAGNETIC CLUTCH CONSTRUCTION 07–40–9
THERMAL PROTECTOR CONSTRUCTION 07–40–9
REFRIGERANT PRESSURE SWITCH CONSTRUCTION 07–40–10
SOLAR RADIATION SENSOR CONSTRUCTION 07–40–10
AMBIENT TEMPERATURE SENSOR CONSTRUCTION 07–40–10
CABIN TEMPERATURE SENSOR CONSTRUCTION 07–40–11
EVAPORATOR TEMPERATURE SENSOR CONSTRUCTION 07–40–11
WATER HEATER SYSTEM OUTLINE [MZR-CD (RF Turbo)] 07–40–11
WATER HEATER SYSTEM STRUCTURAL VIEW [MZR-CD (RF Turbo)] 07–40–12
WATER HEATER SYSTEM OPERATION [MZR-CD (RF Turbo)] 07–40–12
CLIMATE CONTROL UNIT CONSTRUCTION [FULL-AUTO AIR CONDITIONER] 07–40–13
CAN (CONTROLLER AREA NETWORK) OUTLINE 07–40–14
FULL-AUTO AIR CONDITIONER FUNCTION 07–40–14
AIRFLOW TEMPERATURE CONTROL OUTLINE 07–40–18
AIRFLOW TEMPERATURE CONTROL SYSTEM DIAGRAM 07–40–19
AIRFLOW TEMPERATURE CONTROL OPERATION 07–40–19
AIRFLOW VOLUME CONTROL OUTLINE 07–40–21
AIRFLOW VOLUME CONTROL SYSTEM DIAGRAM 07–40–21
AIRFLOW VOLUME CONTROL OPERATION 07–40–22
AIRFLOW MODE CONTROL OUTLINE 07–40–24
AIRFLOW MODE CONTROL SYSTEM DIAGRAM 07–40–25
AIRFLOW MODE CONTROL OPERATION 07–40–25
AIR INTAKE CONTROL OUTLINE 07–40–26
AIR INTAKE CONTROL SYSTEM DIAGRAM 07–40–26
AIR INTAKE CONTROL OPERATION . . . 07–40–27
A/C COMPRESSOR CONTROL OUTLINE 07–40–27
A/C COMPRESSOR CONTROL SYSTEM DIAGRAM 07–40–28
A/C COMPRESSOR CONTROL OPERATION 07–40–28
CLIMATE CONTROL UNIT CONSTRUCTION [MANUAL AIR CONDITIONER] 07–40–29
MANUAL AIR CONDITIONER CONTROL SYSTEM 07–40–30

CONTROL SYSTEM OUTLINE

DPE074000000T05

Reduced fuel consumption when the A/C is operating (Reduced idling increase amount when A/C compressor is operating)	• Refrigerant pressure switch with medium-pressure switch adopted
Improved operability	• Climate control unit with enlarged operation dial and switch adopted
Simplification, size reduction	• Climate control unit integrated with A/C amplifier adopted. (Full-auto air conditioner)
Wiring harness simplification	• CAN for communication between the PCM, audio, meter, and climate control unit adopted (Full-auto air conditioner)
Defroster mode defrosting performance improved	• Climate control unit that switches to fresh air automatically when the mode dial is turned to defroster mode adopted (Manual air conditioner)

CONTROL SYSTEM LOCATION INDEX [FULL-AUTO AIR CONDITIONER]

DPE074000000T01

L.H.D.

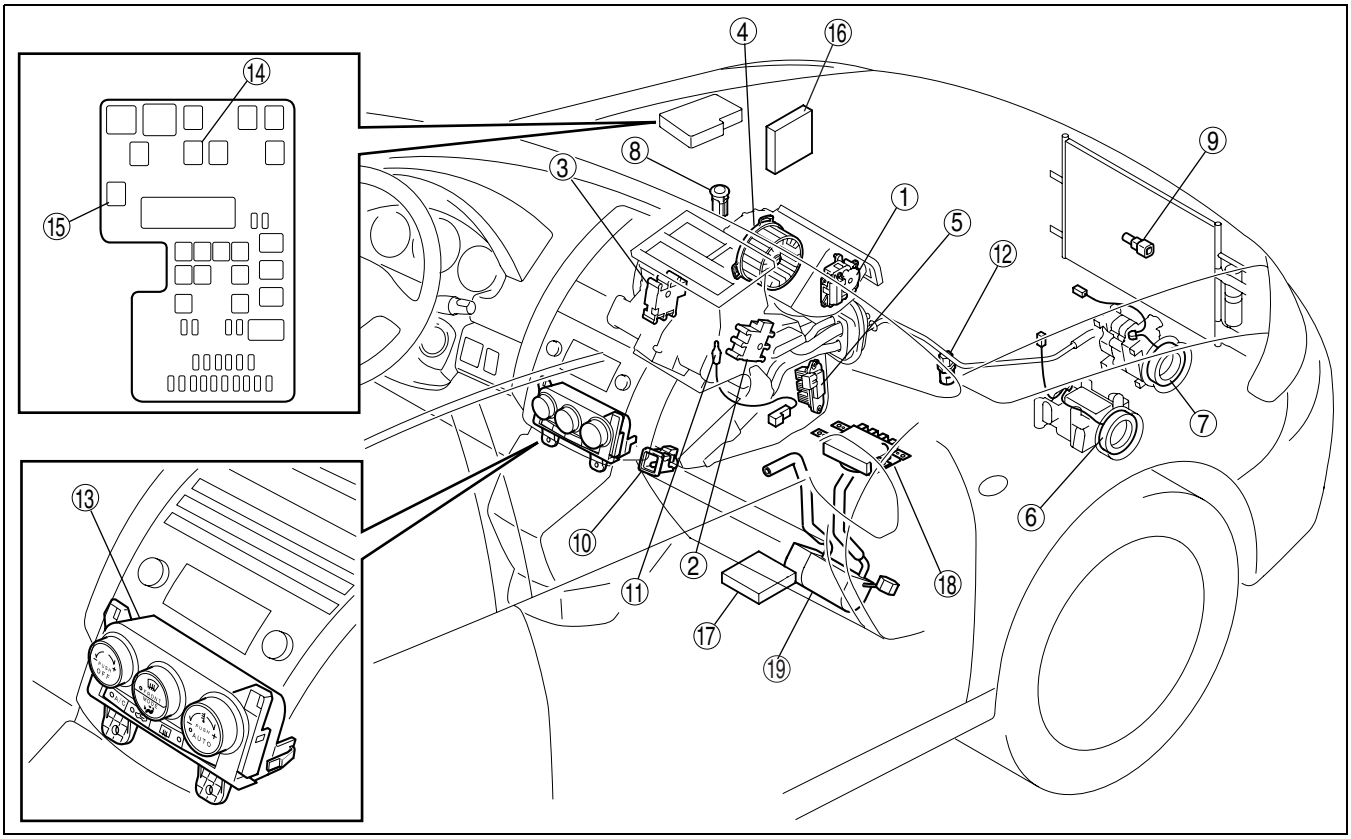

DPE740ZW1001

R.H.D.

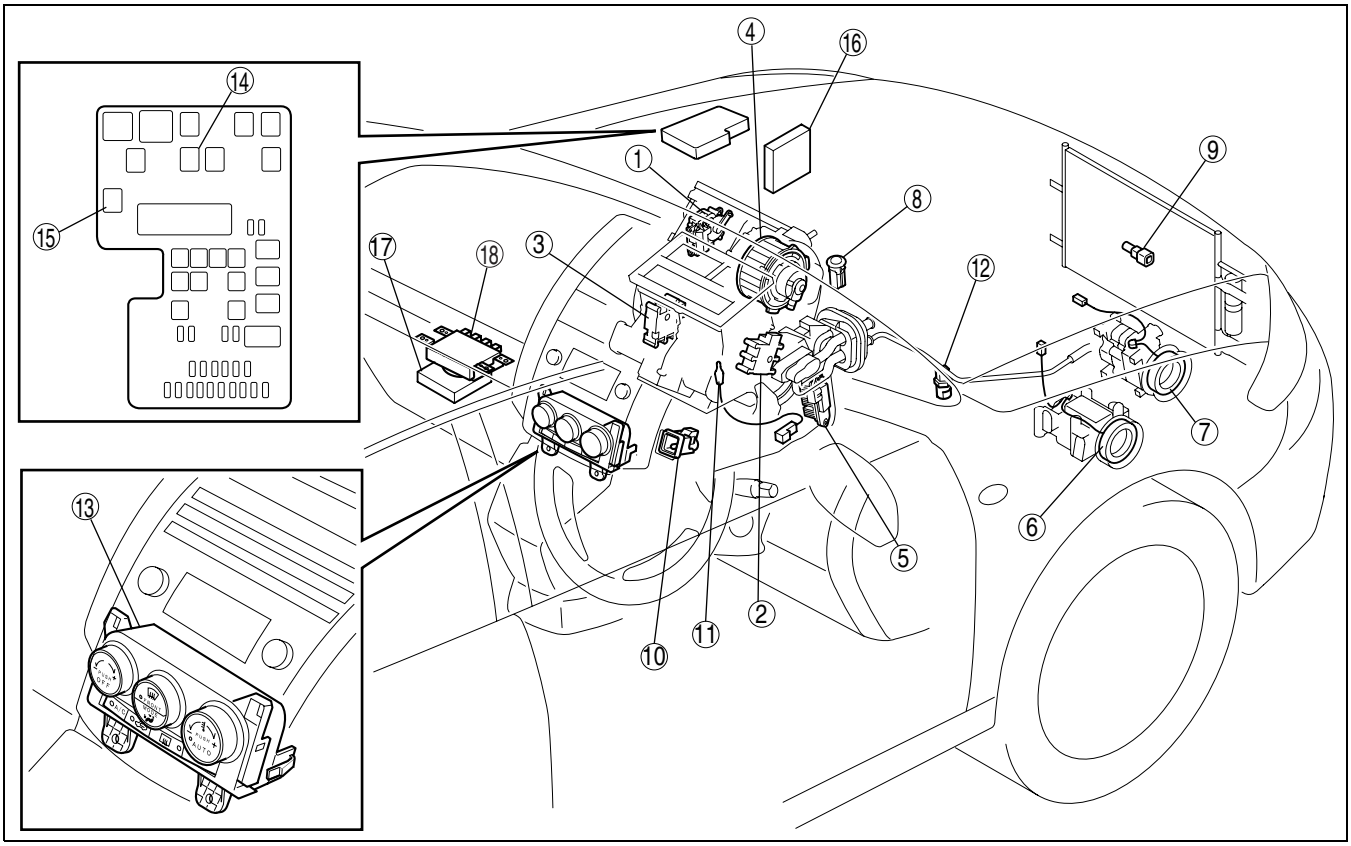

DPE740ZW1002

1	Air intake actuator
2	Air mix actuator

3	Airflow mode actuator
4	Blower motor

5	Power MOS FET
6	Magnetic clutch (LF, L8)
7	Magnetic clutch (MZR-CD (RF Turbo))
8	Solar radiation sensor
9	Ambient temperature sensor
10	Cabin temperature sensor
11	Evaporator temperature sensor
12	Refrigerant pressure switch
13	Climate control unit
14	A/C relay
15	Blower relay
16	PCM (LF, L8)
17	PCM (MZR-CD (RF Turbo))
18	BCM
19	Water heater unit (MZR-CD (RF Turbo))

CONTROL SYSTEM LOCATION INDEX [MANUAL AIR CONDITIONER]

DPE074000000T02

L.H.D.

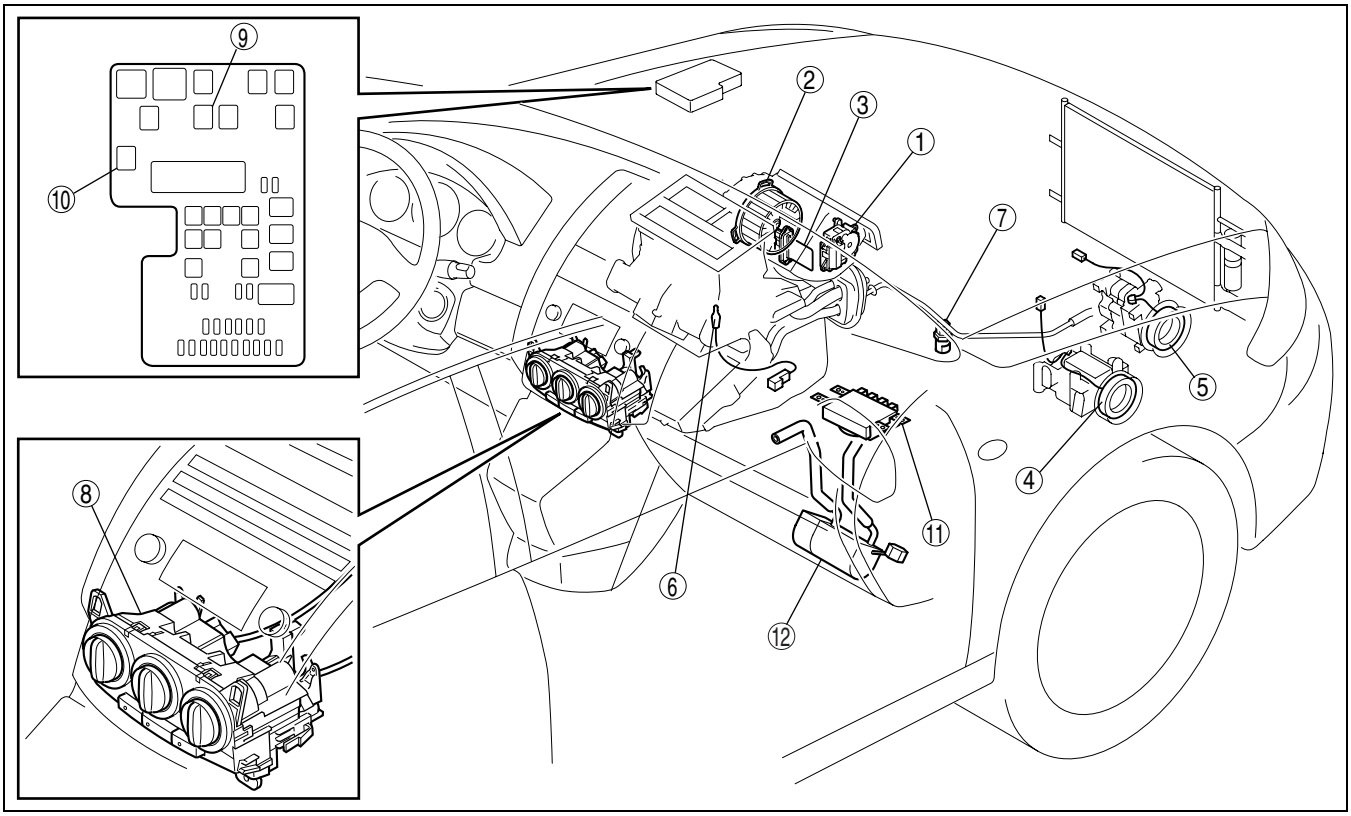

DPE740ZW1003

R.H.D.

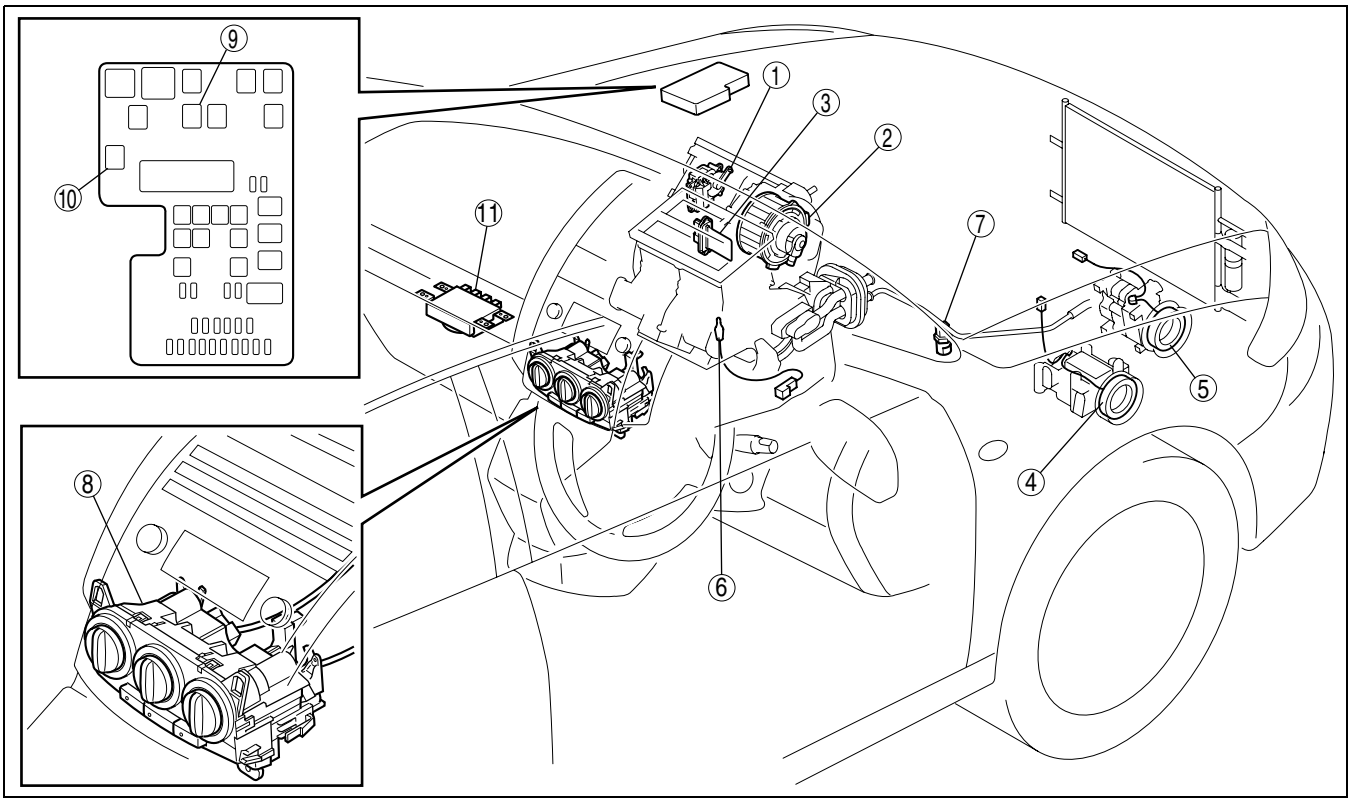

DPE740ZW1004

1	Air intake actuator
2	Blower motor
3	Resistor
4	Magnetic clutch (LF, L8)
5	Magnetic clutch (MZR-CD (RF Turbo))
6	Evaporator temperature sensor

7	Refrigerant pressure switch
8	Climate control unit
9	A/C relay
10	Blower relay
11	BCM
12	Water heater unit (MZR-CD (RF Turbo))

CONTROL SYSTEM WIRING DIAGRAM [FULL-AUTO AIR CONDITIONER]

DPE074000000T03

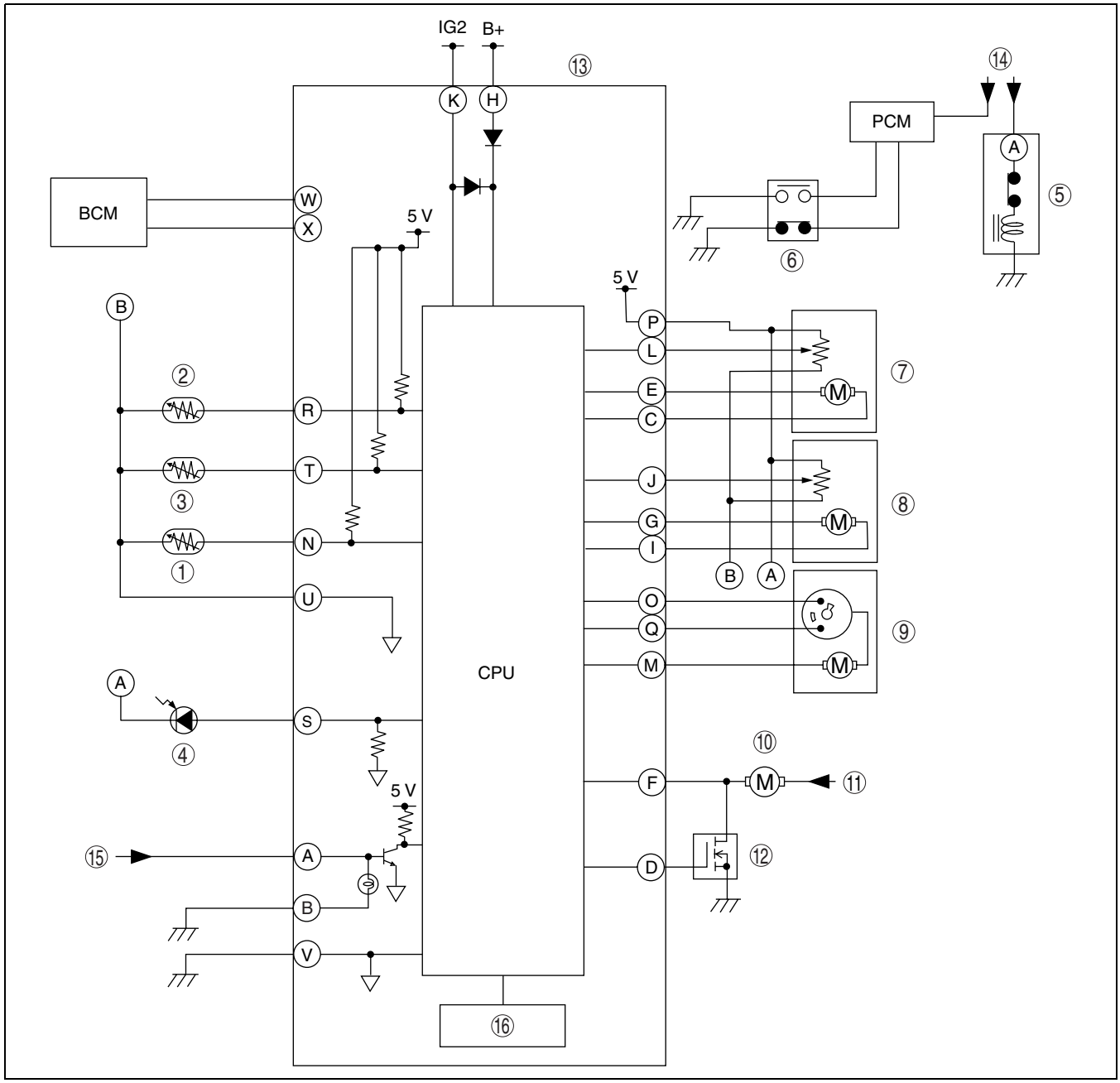

DPE740ZT1101

1	Ambient temperature sensor
2	Cabin temperature sensor
3	Evaporator temperature sensor
4	Solar radiation sensor
5	Magnetic clutch
6	Refrigerant pressure switch
7	Air mix actuator
8	Airflow mode actuator

9	Air intake actuator
10	Blower motor
11	Blower relay
12	Power MOS FET
13	Climate control unit
14	A/C relay
15	TNS relay
16	Each switch

CONTROL SYSTEM WIRING DIAGRAM[MANUAL AIR CONDITIONER]

DPE074000000T04

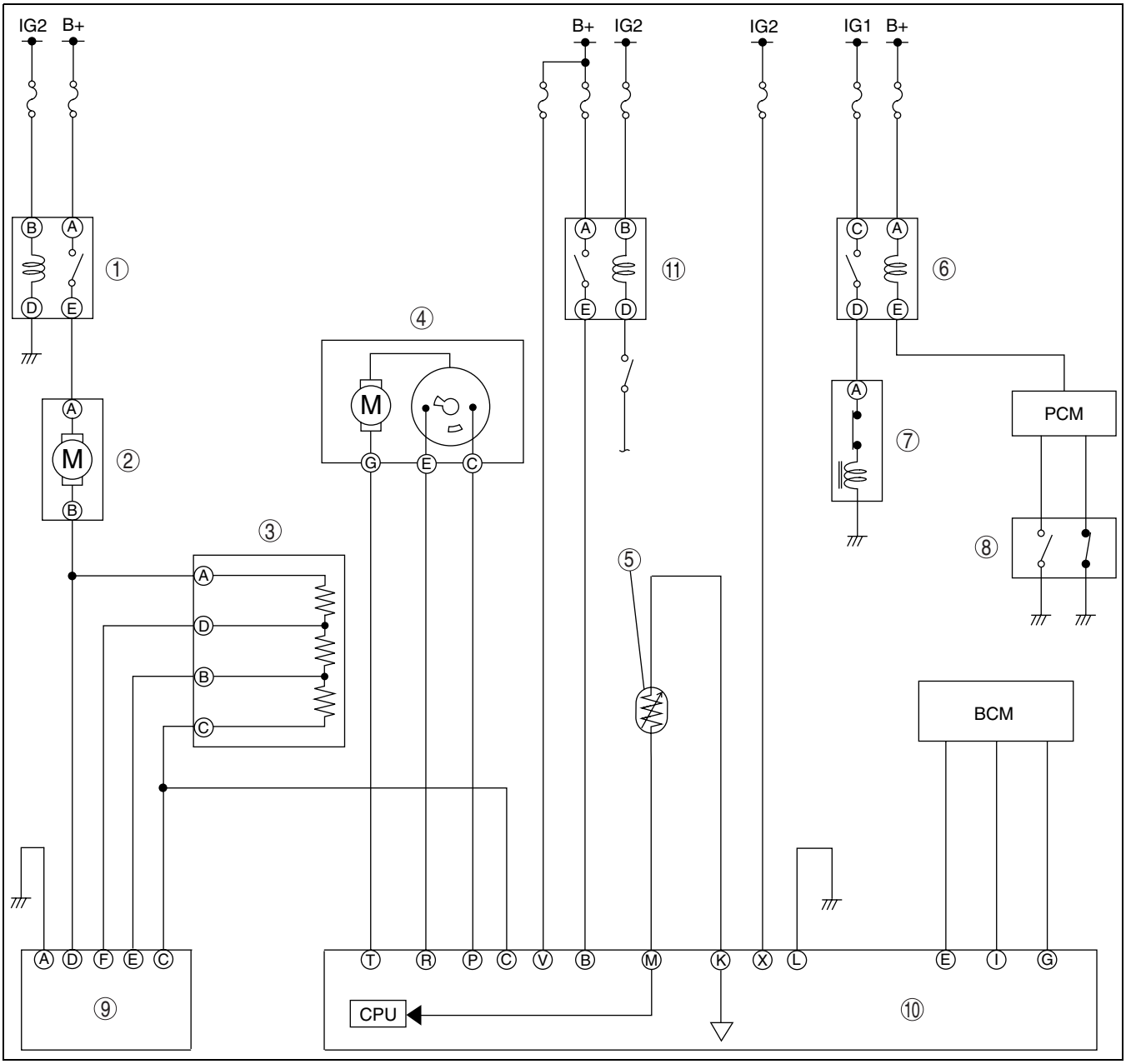

DPE740ZT1102

1	Blower relay
2	Blower motor
3	Resistor
4	Air intake actuator
5	Evaporator temperature sensor
6	A/C relay

7	Magnetic clutch
8	Refrigerant pressure switch
9	Fan switch
10	Climate control unit
11	TNS relay

AIR INTAKE ACTUATOR CONSTRUCTION

DPE074061060T01

- A sliding contact type has been adopted.

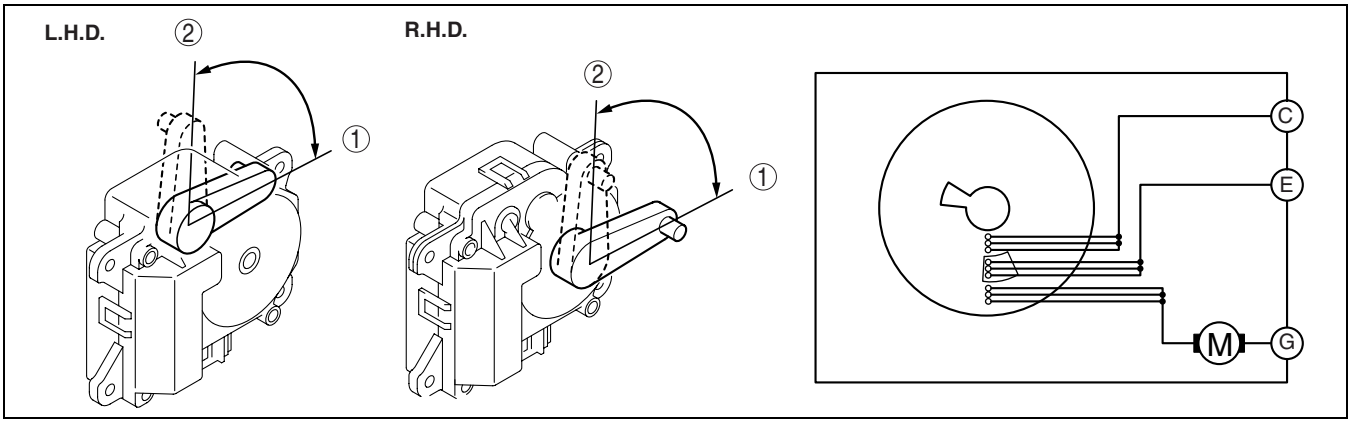

B3E0740T405

1	Recirculate	2	Fresh

AIR MIX ACTUATOR CONSTRUCTION

DPE074061415T01

- A potentiometer type, which allows minute and smooth changes of the door position, has been adopted.

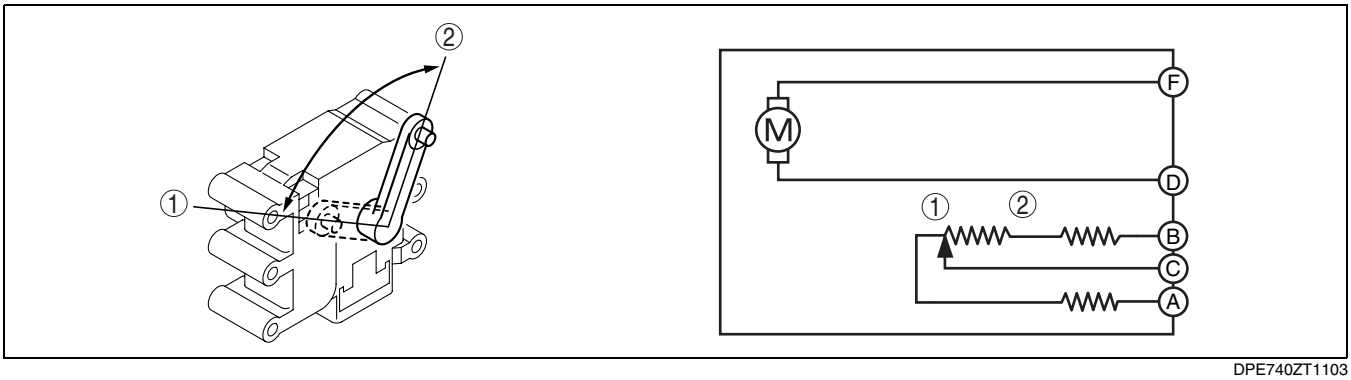

DPE740ZT1103

1	MAX HOT	2	MAX COLD

AIRFLOW MODE ACTUATOR CONSTRUCTION

DPE074061070T01

- A potentiometer type, which allows minute and smooth changes of the door position, has been adopted.

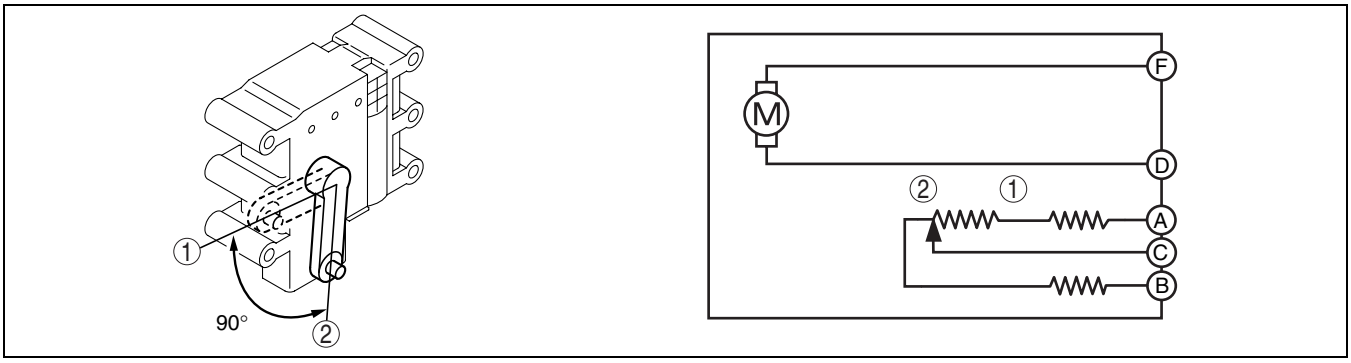

DPE740ZT1104

1	VENT	2	DEFROSTER

BLOWER MOTOR CONSTRUCTION

DPE074061020T01

- A sirocco fan has been adopted.

1	Blower motor
2	Sirocco fan

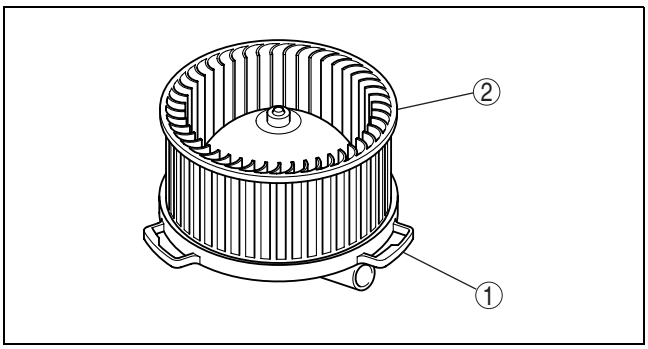

B3E0740T008

POWER MOS FET FUNCTION

DPE074000116T01

Function

- Controls the supply voltage to the blower motor according to the gate voltage sent from the climate control unit and adjusts the rotation speed (airflow volume).

1	Power MOS FET
2	Blower relay
3	Blower motor
4	Gate voltage
5	Climate control unit

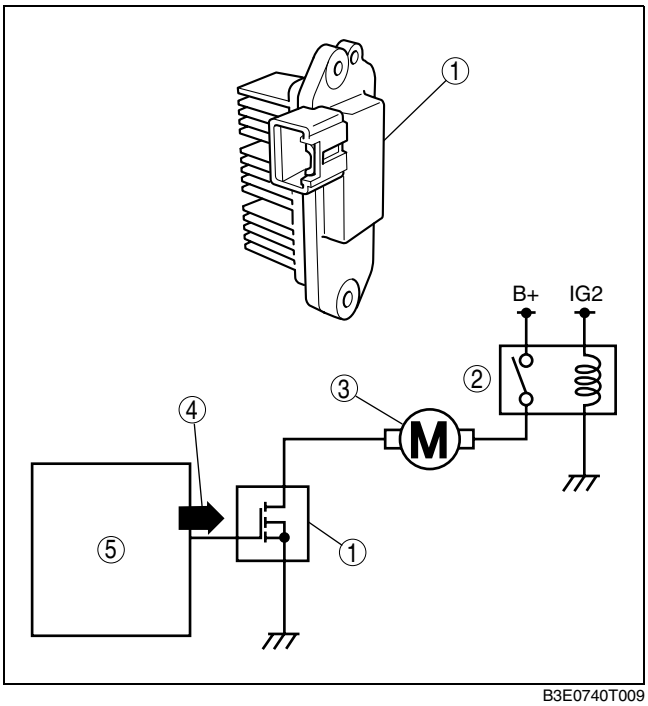

B3E0740T009

Construction/Operation

- There are three electrodes: source, gate, and drain electrodes.

1	Gate
2	Drain
3	Source

- The resistance between terminals B and A (between drain and source) changes according to the voltage (gate voltage) applied to terminal E (gate).
- When the gate voltage increases, the resistance between terminals B and A decreases, allowing the current to flow easily.

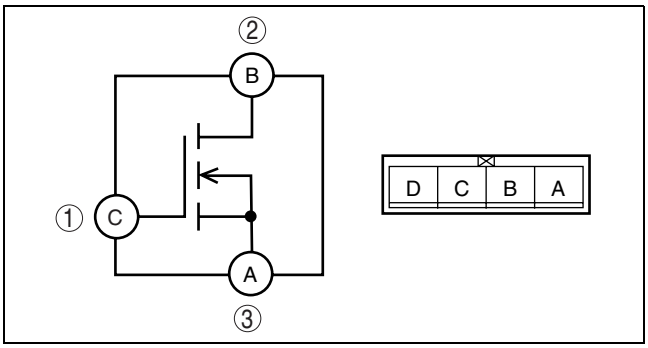

B3E0740T010

1	Small current
2	Low gate voltage
3	Large current
4	High gate voltage

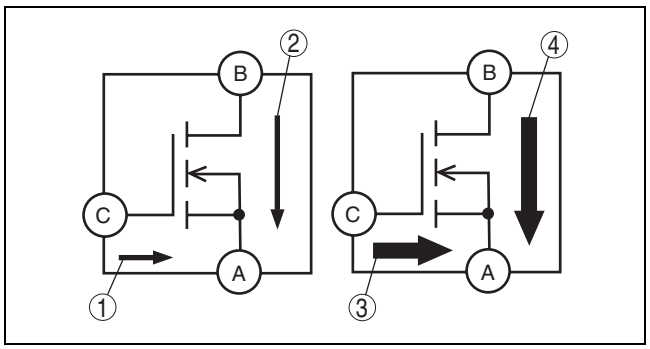

B3E0740T011

RESISTOR CONSTRUCTION

DPE074061015T01

- A thin card type has been adopted for weight reduction.

1	Card-shaped resistor

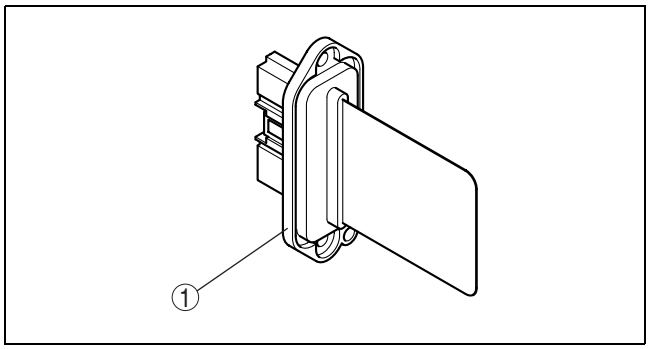

B3E0740T012

MAGNETIC CLUTCH CONSTRUCTION

DPE074061010T01

- Consists of the following parts:

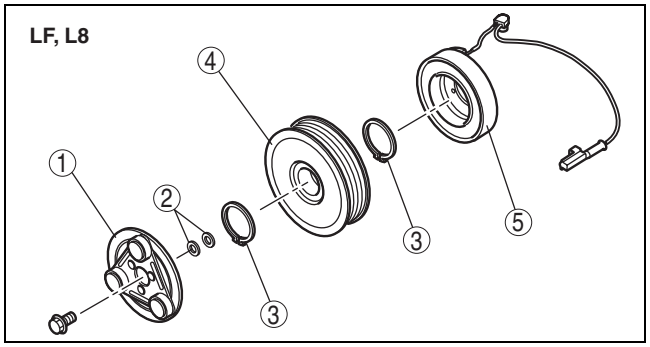

DPE740ZT1115

1	Pressure plate
2	Shim
3	Snap ring
4	A/C compressor pulley
5	Stator and thermal protector

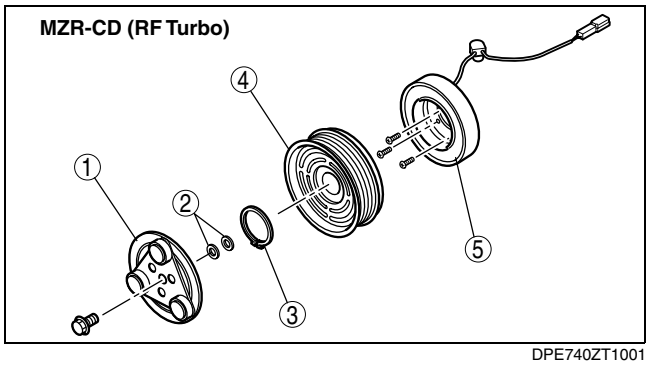

DPE740ZT1001

THERMAL PROTECTOR CONSTRUCTION

DPE074061000T01

- An indirect sensing type has been adopted, reducing the number of the component parts.

1	Thermal protector

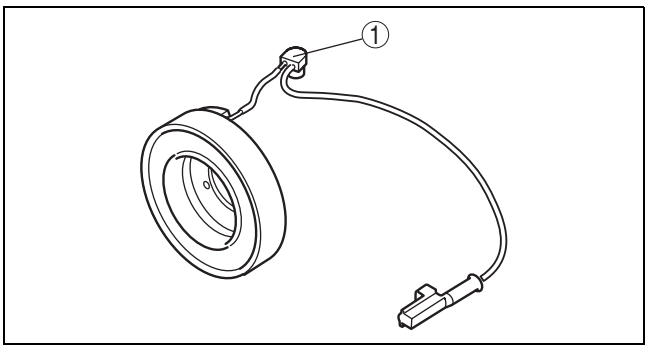

B3E0740T014

REFRIGERANT PRESSURE SWITCH CONSTRUCTION

DPE074061503T01

- A triple pressure type has been adopted.
- Consists of the low/high-pressure switch that protects the refrigerant cycle by cutting the A/C signal when pressure in the refrigerant cycle is abnormally high or low, and the medium-pressure switch that outputs an idling increase signal according to the A/C compressor operation load.

Medium-pressure switch

- When the refrigerant pressure is **approx. 1.39 MPa {14.2 kgf·cm^2, 202 psi} or more**, the contact is energized and an idling increases signal is output to the PCM.
- When the A/C is on and an idling increase signal is input to the PCM, it sends an operation signal to the IAC solenoid valve.

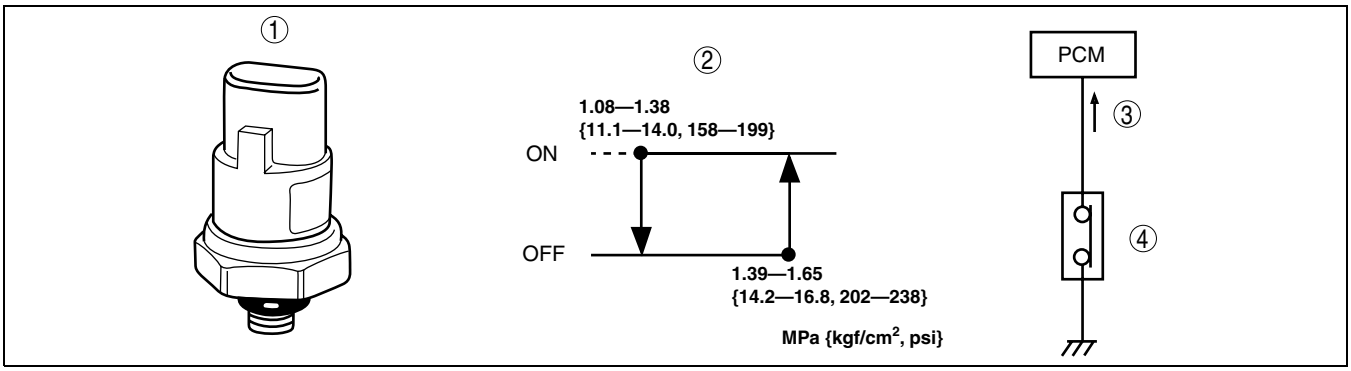

B3E0740T015

1	Refrigerant pressure switch
2	Operation pressure

3	Idling increase signal
4	Medium-pressure switch

SOLAR RADIATION SENSOR CONSTRUCTION

DPE074061751T01

- A photo diode (light-receiving diode) has been adopted.

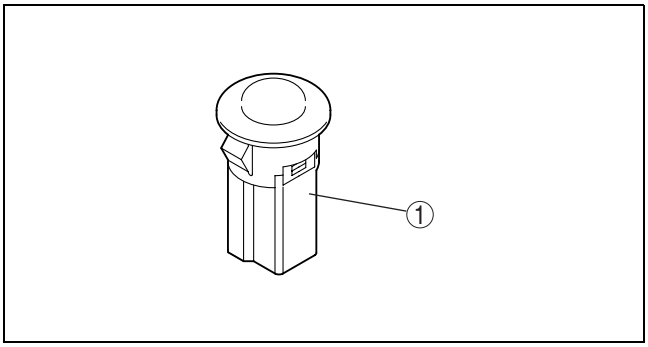

B3E0740T016

1	Solar radiation sensor

AMBIENT TEMPERATURE SENSOR CONSTRUCTION

DPE074061764T01

- A thermistor type has been adopted.

1	Ambient temperature sensor

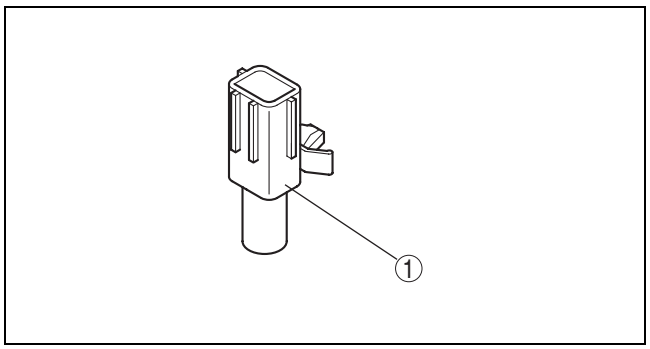

B3E0740T017

CABIN TEMPERATURE SENSOR CONSTRUCTION

DPE074061758T01

- A thermistor has been adopted.

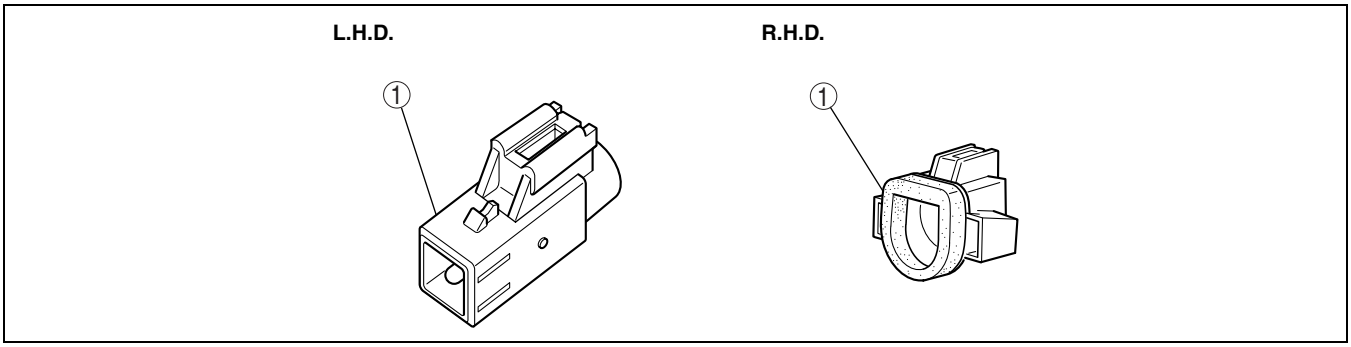

DPE740ZT1002

1	Cabin temperature sensor

EVAPORATOR TEMPERATURE SENSOR CONSTRUCTION

DPE074061022T01

- A thermistor type has been adopted.

1	Evaporator temperature sensor

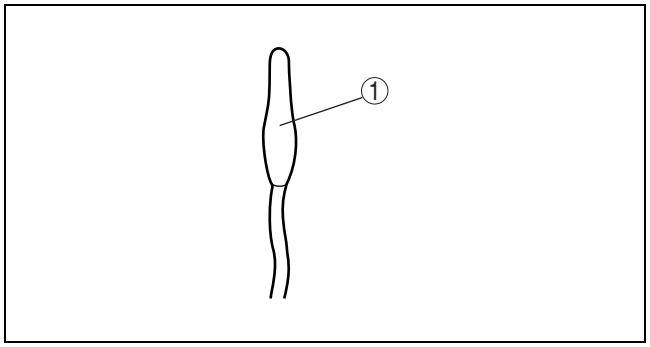

B3E0740T019

WATER HEATER SYSTEM OUTLINE [MZR-CD (RF TURBO)]

DPE074000169T01

- To improve heating capability directly after cold start, a water heater system has been adopted for MZR-CD (RF Turbo) model.
- Within the water heater unit, fuel is combusted and used to heat the engine coolant.
- The heated coolant is then passed through the heater core, which uses ti to provide heated air to the vehicle cabin.

WATER HEATER SYSTEM STRUCTURAL VIEW [MZR-CD (RF TURBO)]

DPE074000169T02

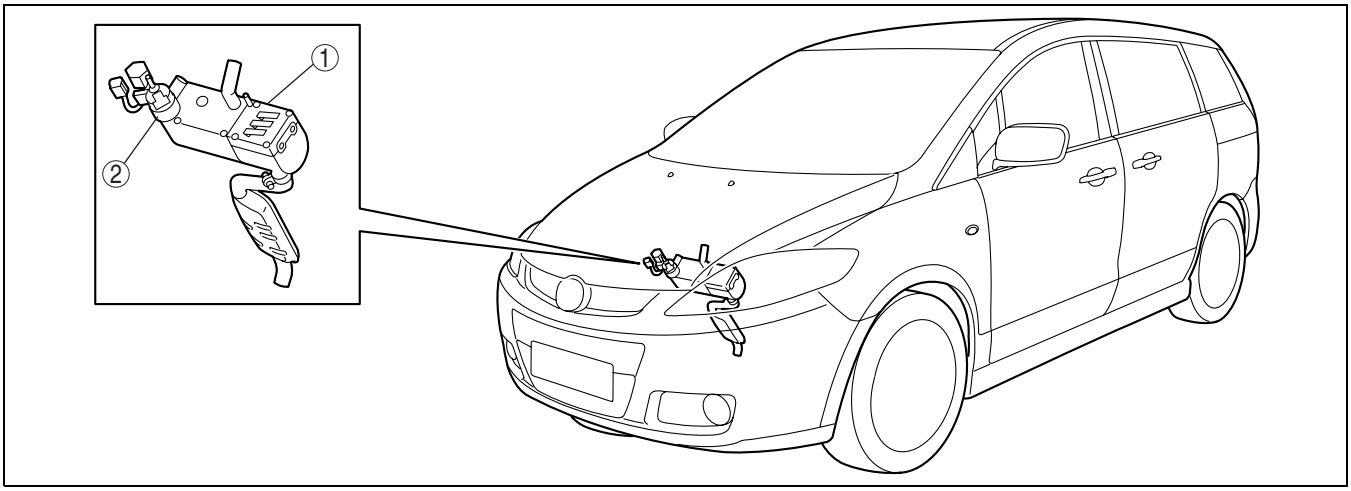

DPE740ZT1009

1	Water heater unit		2	Fuel pump (water heater system)

WATER HEATER SYSTEM OPERATION [MZR-CD (RF TURBO)]

DPE074000169T03

Starting Conditions

- The water heater system will start to operate when all of the following conditions are met:
  - — Ambient temperature **less than 5 °C {41 °F}**.
  - — Water temperature **less than 70 °C {158 °F}**.

Normal Operation

- The CPU in the water heater unit outputs a signal to blower fan and fuel pump, which then deviver air and fuel to the unit.
- Within the unit, fuel is vaporized and mixed with air, and then sent to the combustion chamber.
- The mixture is ignited, by a spark from the glow plug, in the combustion chamber.
- Engine coolant temperature is raised as it circulates along the outside of the combustion chamber.

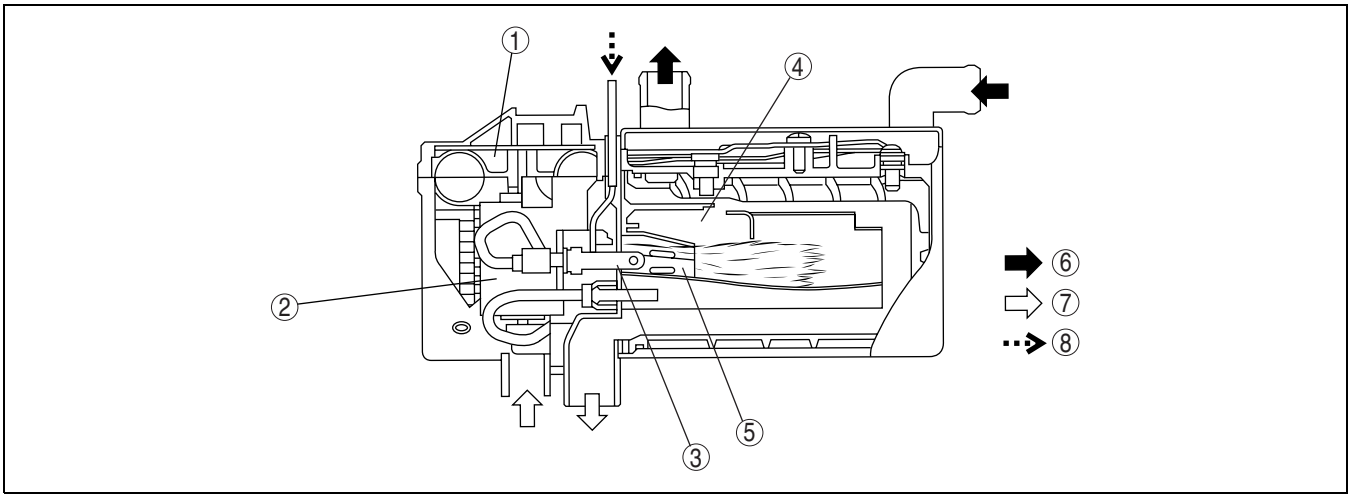

DPE740ZT1008

1	Blower fan		5	Burner
2	CPU		6	Water
3	Glow plug		7	Air
4	Combustion chamber		8	Fuel

Full/half Switching

- Depending on the engine coolant temperature, the CPU sets the flame to eigher full or half strength settings.

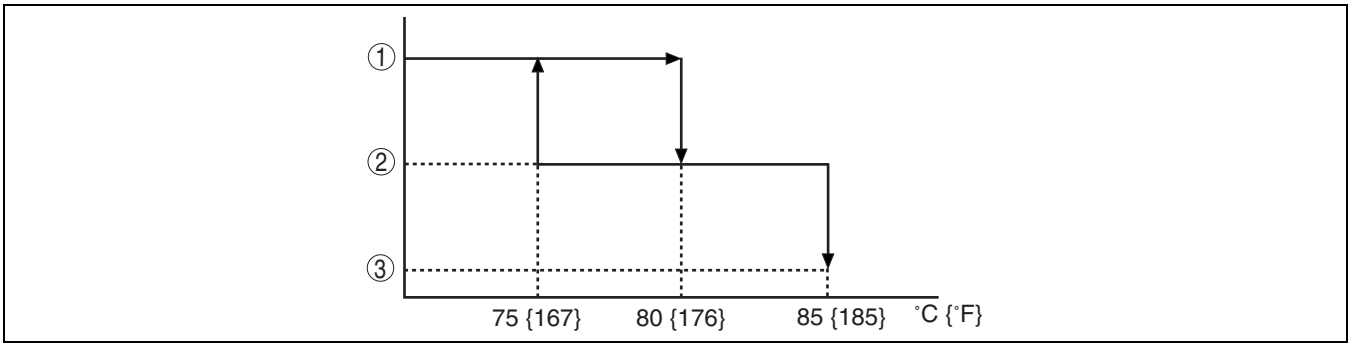

DPE740ZT1114

1	Full mode
2	Half mode

3	Idle mode

CLIMATE CONTROL UNIT CONSTRUCTION [FULL-AUTO AIR CONDITIONER]

DPE074061190T01

- A logic-type climate control unit is used with the full-auto air conditioner.
- Each switches and dials have been enlarged to improve ease of operation.

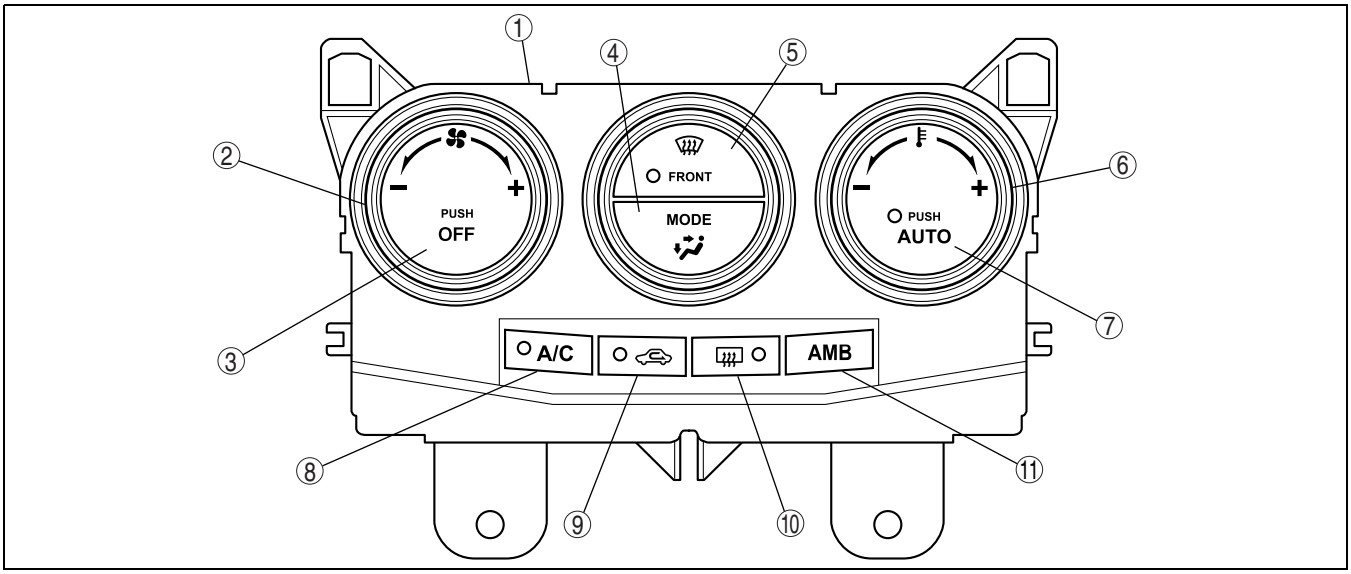

DPE740ZT1105

1	Climate control unit
2	Airflow volume control dial
3	OFF switch
4	MODE switch
5	DEFROSTER switch
6	Temperature setting dial

7	AUTO switch
8	A/C switch
9	REC switch
10	Rear window defroster switch
11	AMB switch

- Information about the operating condition of the system is displayed on the information display.

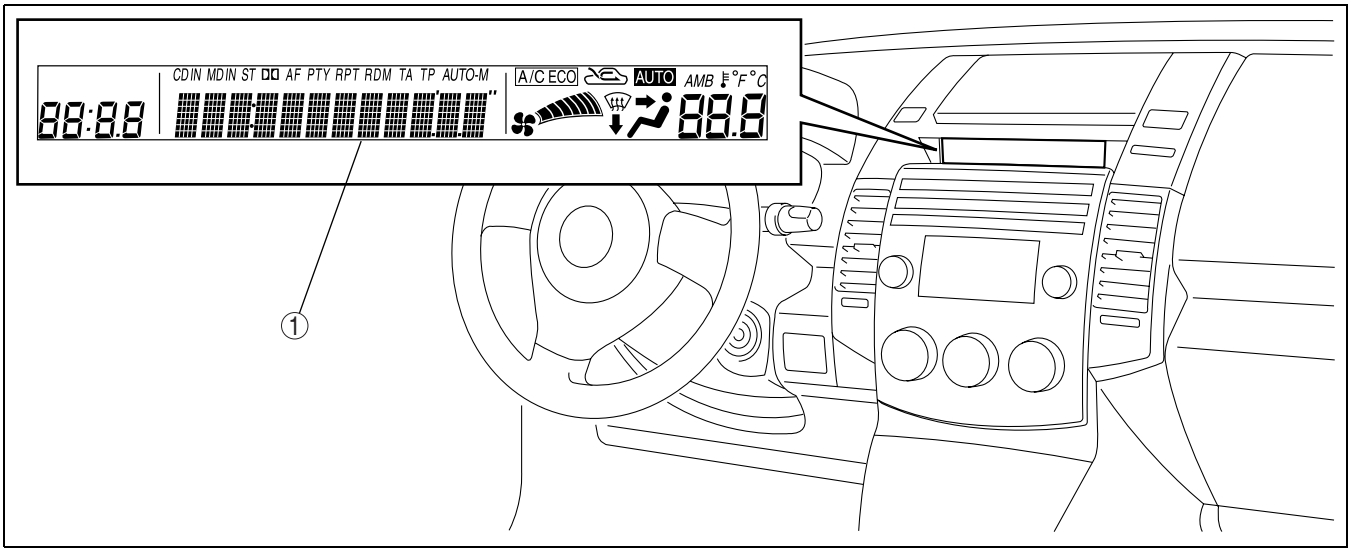

DPE740ZT1004

1	Information display

CAN (CONTROLLER AREA NETWORK) OUTLINE

DPE074061190T02

- The climate control unit sends and receives data to and from other modules via the CAN system. Refer to Section 09-40 for a detailed explanation of the CAN.

Data sent/received

Data sent

- A/C operation status
- A/C operation status display
- Ambient temperature display
- Operation sound for climate control unit switch
- Malfunction diagnosis output

Data received

- Engine coolant temperature
- Vehicle speed signal
- Temperature display (°C/°F) determination
- Malfunction diagnosis input
- Wiper status
- R/DEF IND. signal
- Light ON/OFF signal
- Water heater system operation signal

FULL-AUTO AIR CONDITIONER FUNCTION

DPE074000003T01

Block Diagram

- The control system consists of input components (sensors), output components (actuators, magnetic clutch, power MOS FET, and other parts), and a control device (climate control unit).

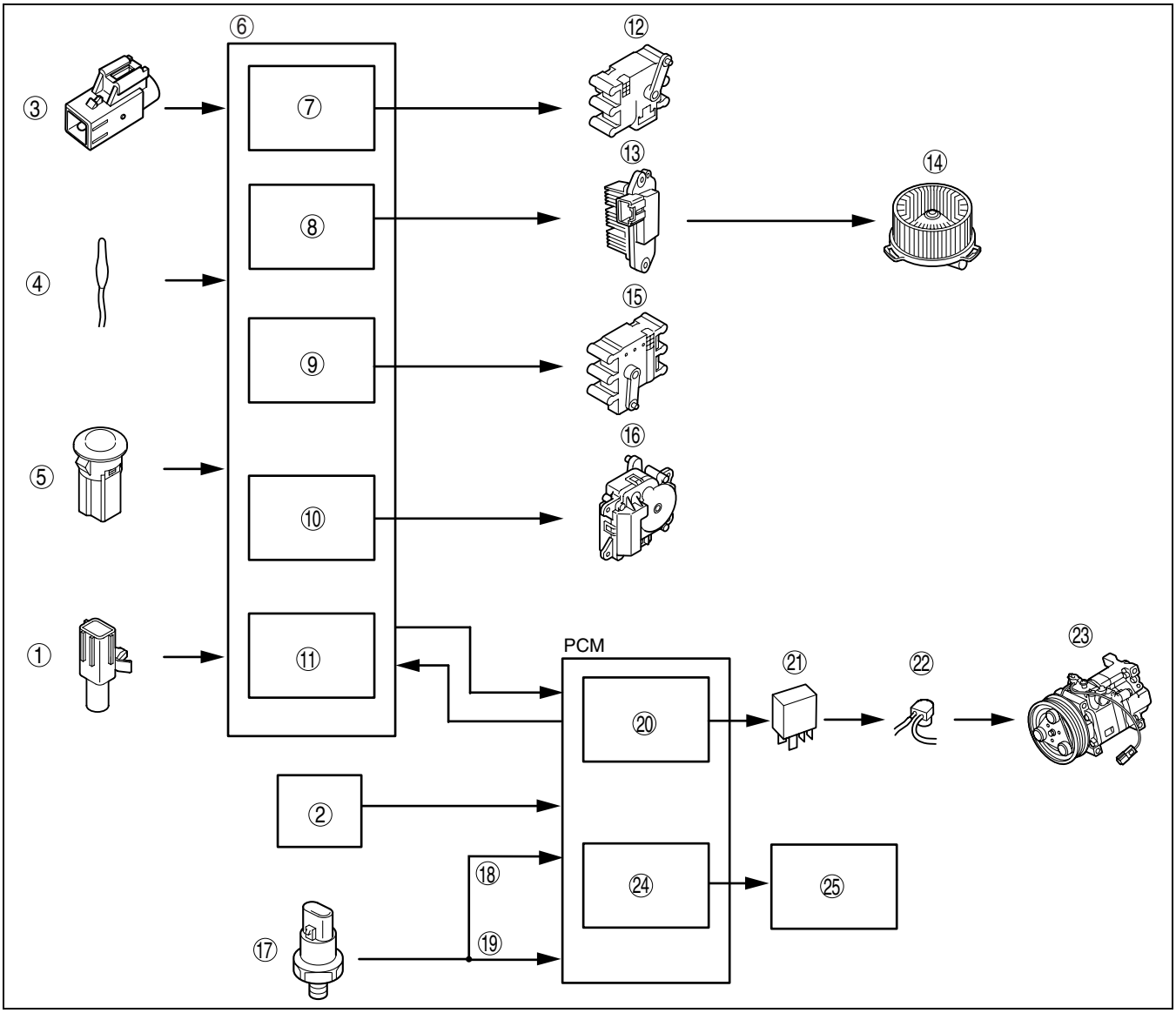

DPE740ZT1005

1	Ambient temperature sensor
2	ECT sensor
3	Cabin temperature sensor
4	Evaporator temperature sensor
5	Solar radiation sensor
6	Climate control unit
7	Airflow temperature control
8	Airflow volume control
9	Airflow mode control
10	Air intake control
11	A/C compressor control
12	Air mix actuator
13	Power MOS FET

14	Blower motor
15	Airflow mode actuator
16	Air intake actuator
17	Refrigerant pressure switch
18	HI and LO pressure
19	Medium pressure
20	A/C cut control
21	A/C relay
22	Stator and thermal protector
23	Magnetic clutch
24	Idle speed control
25	IAC valve

Control Table

- The full-auto air conditioner system functions based on the five basic types of controls and three supplementary functions.

Basic control	Control description	Correction control
Airflow temperature control	Airflow temperature automatic control	• Air intake correction • A/C correction • MAX HOT and MAX COLD correction • Engine coolant temperature correction
Airflow volume control	Airflow volume automatic control	• Engine coolant temperature correction (warm-up correction) • Vehicle speed correction • Mild start correction • MAX HOT and MAX COLD correction • Window fogging prevention correction at start • Starting compensation correction • Defroster correction • Starting burnt-out prevention function
	Airflow volume manual control	• Defroster correction • Starting burnt-out prevention function
Airflow mode control	Airflow mode automatic control	• Ambient temperature correction • Engine coolant temperature correction (warm-up correction)
	Airflow mode manual control	—
Air intake control	Air intake automatic control	• MAX COLD correction • Defroster correction • Ambient temperature correction • A/C OFF correction
	Air intake manual control	• Defroster correction
A/C compressor control	A/C compressor automatic control	• Defroster correction • Ambient temperature correction • MAX COLD correction • Wiper correction • Window fogging prevention correction at start
	A/C compressor manual control	• Defroster correction • Ambient temperature correction • Window fogging prevention correction at start

Supplementary function
Fail-safe function
Sensor signal delay function
On-board diagnostic function

Control Type Transition by Switch Operation
Airflow temperature control, airflow volume control

Operation switch		Airflow temperature control	Airflow volume control									
		Control prior to switch operation	Control prior to switch operation									
		Automatic control	Automatic control	Defroster correction	Manual control							
					OFF	1	2	3	4	5	6	7
OFF switch		Automatic control	OFF	OFF	OFF							
AUTO switch		Automatic control	Automatic control	Automatic control	Automatic control							
Fan switch	+	Automatic control	Manual control*2	Manual control*2	1	2	3	4	5	6	7	7
	-	Automatic control	Manual control*3	Manual control*3	1	1	1	2	3	4	5	6
MODE switch		Automatic control	Automatic control	*5	No change							
DEFROSTER switch		Automatic control	Defroster correction	No change	Defroster correction							
A/C switch		Automatic control	Automatic control	No change	No change							
REC/FRESH switch		Automatic control	Automatic control	No change	No change							
Temperature setting dial*1	15.0	MAX COLD	MAX HI	MAX HI	No change							
	15.5—28.5	Automatic control	Automatic control	No change	No change							
	29.0	MAX HOT	AUTO HI*4	AUTO HI	No change							

*1 : Adjusted up or down in increments of 0.5 within a range of 15.0—29.0. When the fan is OFF, the temperature setting can be adjusted in increments of ±1.0.
*2 : Increases to the manual voltage that is closest to the auto or defroster correction voltage.
*3 : Decreases to the manual voltage that is closest to the auto or defroster correction voltage.
*4 : Engine coolant temperature correction takes precedence.
*5 : Returns to condition prior to defroster operation. However, if it had been off prior to defroster operation, it switches to automatic control.

Airflow mode control, air intake control, A/C compressor control

Operation switch		Airflow mode control		Air intake control		A/C compressor control	
		Control prior to switch operation		Control prior to switch operation		Control prior to switch operation	
		Automatic control	Manual control	Automatic control	Manual control	Automatic control	Manual control
OFF switch		Fixed at mode before turned OFF*2	No change*2	Fixed at mode before turned OFF*2	No change*2	OFF	OFF
AUTO switch		Automatic control	Automatic control	Automatic control	Automatic control	Automatic control	Automatic control
Fan switch	+	Automatic control	No change	Automatic control	No change	Automatic control	No change
	-	Automatic control	No change	Automatic control	No change	Automatic control	No change
MODE switch		VENT → BI-LEVEL BI-LEVEL → HEAT HEAT → HEAT/DEF HEAT/DEF → VENT DEFROSTER → HEAT	VENT → BI-LEVEL BI-LEVEL → HEAT HEAT → HEAT/DEF HEAT/DEF → VENT DEFROSTER → HEAT	Automatic control	No change*2	Automatic control	DEFROSTER*3
DEFROSTER switch		DEFROSTER*2	DEFROSTER*2	Defroster correction*2	Defroster correction*2	Defroster correction*3	Defroster correction*3
A/C switch		Automatic control	No change	Automatic control	No change	A/C→OFF OFF→A/C*4	A/C→OFF OFF→A/C*4
REC/FRESH switch		Automatic control	No change	FRESH→REC REC→FRESH	FRESH→REC REC→FRESH	Automatic control	No change
Temperature setting dial*1	15.0	Automatic control	No change	Automatic control	No change	Automatic control	No change
	15.5—28.5	Automatic control	No change	Automatic control	No change	Automatic control	No change
	29.0	Automatic control	No change	Automatic control	No change	Automatic control	No change

*1 : Adjusted up or down in increments of 0.5 within a range of 15.0—29.0. When the fan is OFF, the temperature setting can be adjusted in increments of ±1.0.
*2 : If operated during defroster correction, it returns to the condition prior to defroster operation.
*3 : If operated during defroster correction, it returns to the condition prior to defroster operation. However, if it had been off prior to defroster operation, it switches to automatic control.
*4 : When the fan is OFF, it is fixed at A/C OFF.

AIRFLOW TEMPERATURE CONTROL OUTLINE

DPE074061193T01

Features

- The airflow temperature is constantly controlled automatically. The climate control unit controls the airflow temperature via the air mix actuator.

AIRFLOW TEMPERATURE CONTROL SYSTEM DIAGRAM

DPE074061193T03

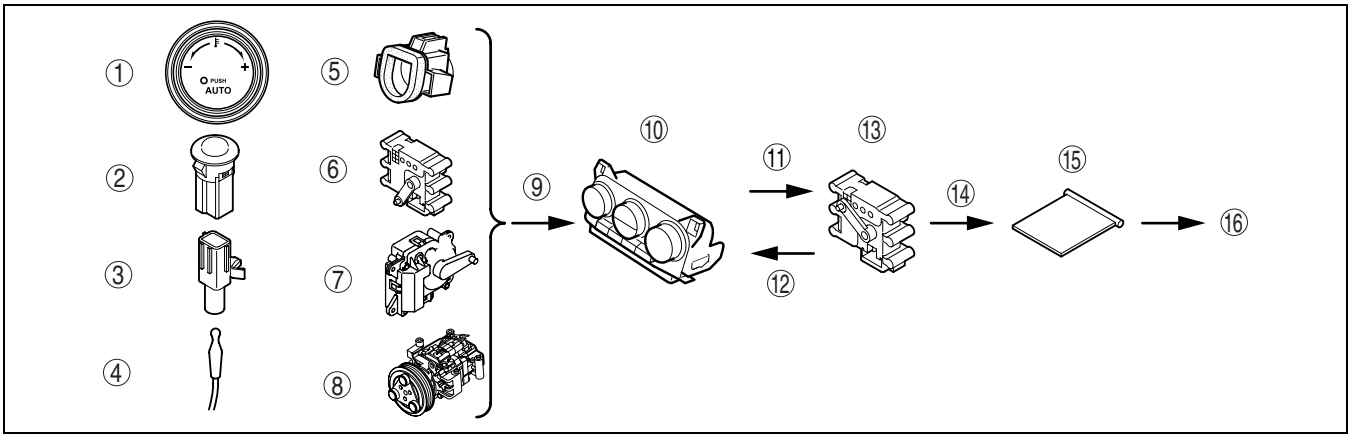

DPE740ZT1106

1	Set temperature
2	Solar radiation amount
3	Ambient temperature
4	Evaporator temperature
5	Cabin temperature
6	Airflow mode
7	Air intake mode
8	A/C compressor control condition

9	Signal
10	Climate control unit
11	Output
12	Feedback
13	Air mix actuator
14	Operation
15	Air mix door
16	Airflow temperature change

AIRFLOW TEMPERATURE CONTROL OPERATION

DPE074061193T05

Airflow Temperature Automatic Control

- The climate control unit calculates the air mix actuator opening angle characteristic for the given ambient temperature based on the set temperature, sunlight intensity, and airflow mode. The air mix actuator opening angle characteristic decreases as the sunlight intensity increases.
- The opening angle characteristic of the air mix actuator and the current ambient temperature are compared and the basic opening angle for the air mix actuator is determined according to the A/C compressor control status. The opening angle must maintain the target temperature (calculated control value T1) in the cabin against changes in external factors such as sunlight intensity and ambient temperature.
- If there is a difference between the target temperature (calculated control value T1) and current cabin temperature, the basic opening angle of the air mix actuator is corrected so that the cabin temperature rapidly reaches the target temperature.
- Calculated control value T1 is the target temperature in the cabin as set by the climate control unit based on differences among the set temperature, temperatures input from the sensors, and sunlight intensity. Calculated control value T1 is calculated according to the changes in the set temperature and temperatures input from the sensors.

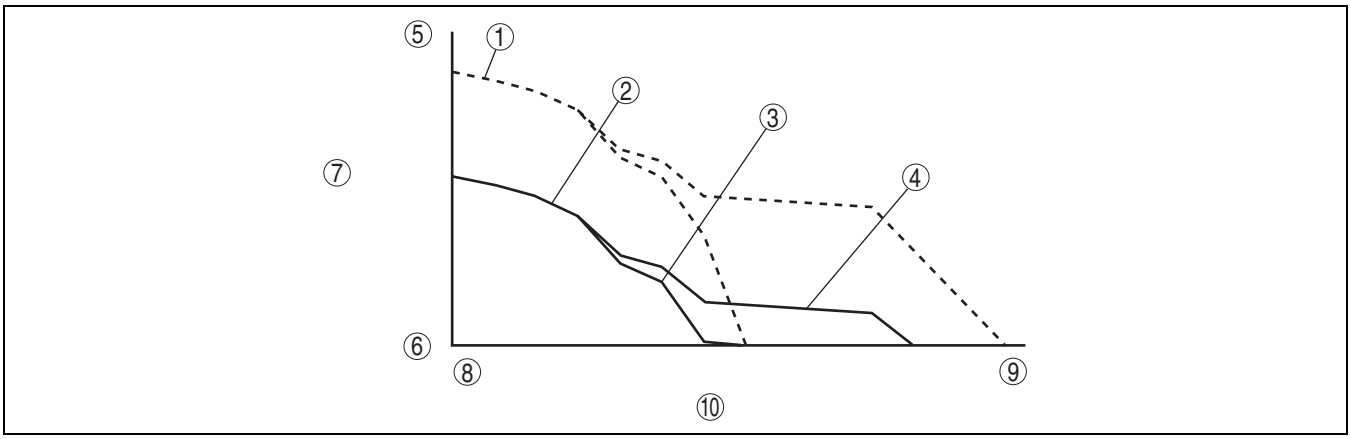

B3E0740T023

1	Low sunlight intensity
2	High sunlight intensity

3	Air mix actuator opening angle characteristic (A/C off mode)

4	Air mix actuator opening angle characteristic (A/C on mode)
5	Fully open (MAX HOT)
6	Fully closed (MAX COLD)
7	Air mix actuator opening angle
8	Low
9	High
10	Ambient temperature

Correction

Air intake correction

- When the air intake mode is switched from FRESH to REC when the A/C is off, a correction is added to the air mix actuator opening angle to prevent a rise in airflow temperature. In addition, this correction delays the air mix actuator operation to prevent a sudden drop in airflow temperature.

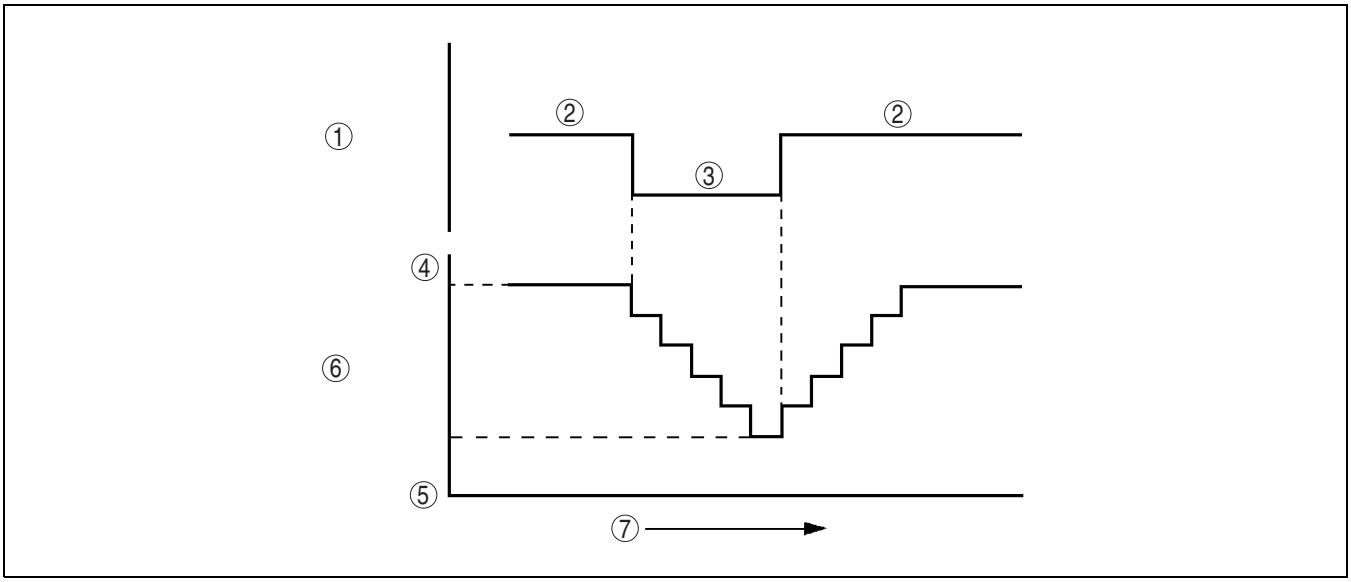

B3E0740T024

1	Air intake door
2	Fresh
3	Recirculate
4	HOT

5	COLD
6	Air mix actuator opening angle correction amount
7	Time

A/C correction

- When the A/C compressor control is switched from A/C ON mode to OFF mode, the opening angle of the air mix actuator is switched from the A/C ON mode opening angle to the A/C OFF mode opening angle to prevent a rise in airflow temperature. In addition, this correction delays the air mix actuator operation to prevent a sudden drop in airflow temperature. However, the operation is not delayed when the evaporator temperature is **15 °C {59 °F} or more**.

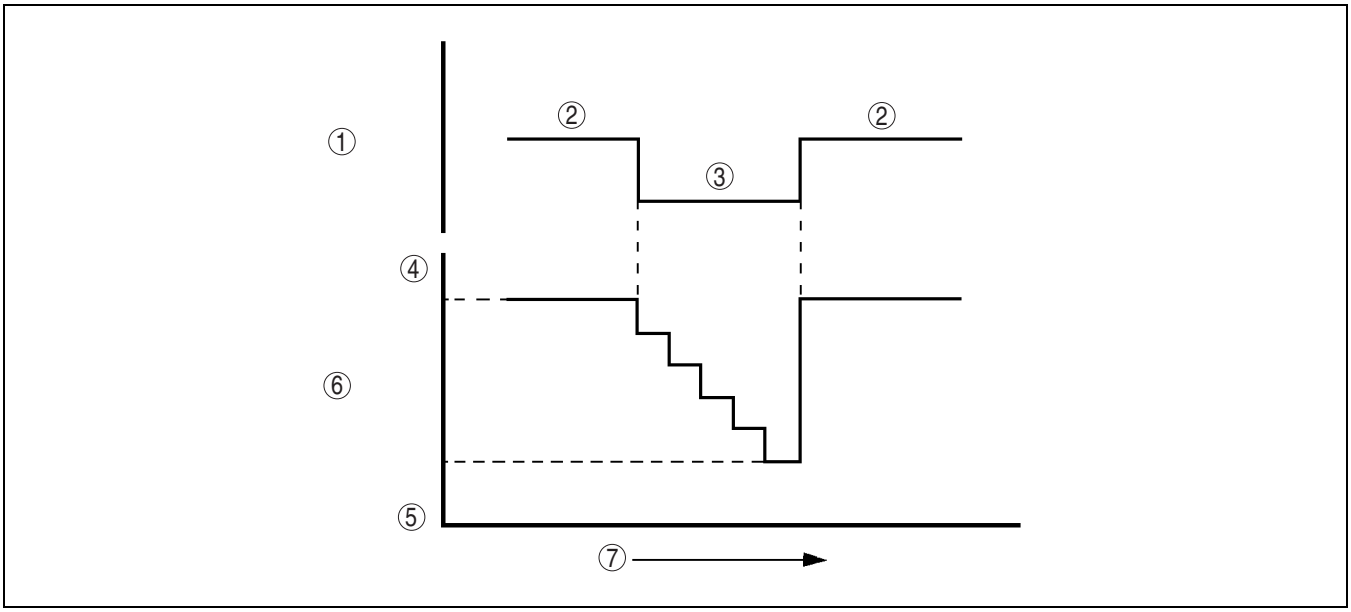

B3E0740T025

1	A/C compressor control
2	A/C on mode
3	A/C off mode
4	HOT

5	COLD
6	Air mix actuator opening angle correction amount
7	Time

MAX HOT and MAX COLD correction

- When the temperature is set to **29.0**, the air mix actuator opening angle is fixed at fully open and when set to **15.0**, it is fixed at fully closed.

Engine coolant temperature correction

- After the engine is started in winter, the air mix actuator opening angle is corrected so that it is adjusted to the HOT side to prevent discomfort caused by cold air blown from the vent. However, the engine coolant temperature correction is not performed when the ambient temperature is **10 °C {50 °F} or more**.

AIRFLOW VOLUME CONTROL OUTLINE

DPE074061194T01

Features

- Consists of the airflow volume automatic and manual controls with the climate control unit controlling the airflow volume (blower motor applied voltage) via the power MOS FET.

AIRFLOW VOLUME CONTROL SYSTEM DIAGRAM

DPE074061194T02

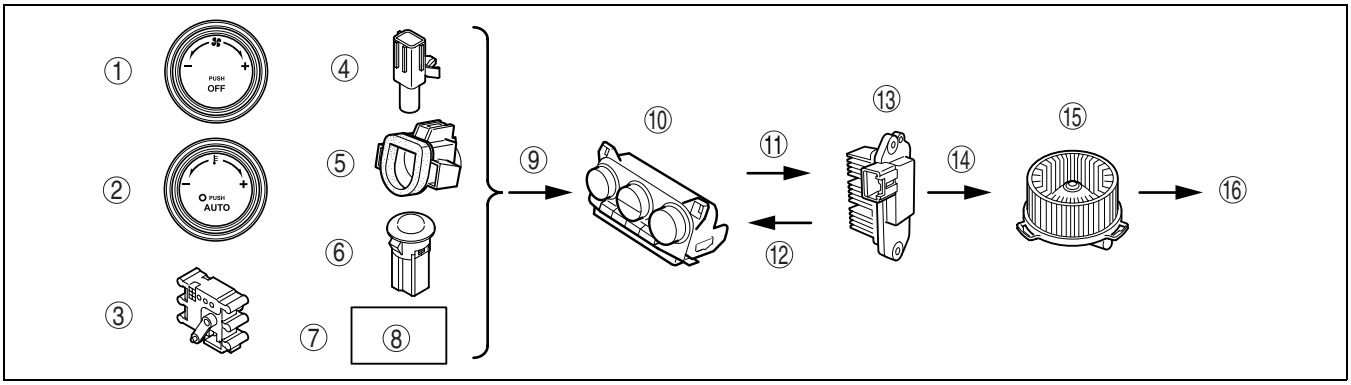

DPE740ZT1107

1	Fan switch
2	Set temperature
3	Airflow mode
4	Ambient temperature
5	Cabin temperature

6	Solar radiation amount
7	Engine coolant temperature
8	ECT sensor
9	Signal
10	Climate control unit

11	Output
12	Feedback
13	Power MOS FET
14	Operation
15	Blower motor
16	Airflow volume change

AIRFLOW VOLUME CONTROL OPERATION

DPE074061194T03

Airflow Volume Automatic Control

- The climate control unit calculates the blower motor applied voltage characteristic based on the set temperature, ambient temperature, and solar radiation amount.
- Compares the differences among this blower motor applied voltage characteristic and the target temperature (Calculated control value T2) and then determines the blower motor applied voltage (AUTO voltage).
- Calculated control value T2 is the difference between the set temperature and temperatures input from the sensors, and is used by the climate control unit to determine the target cabin temperature determined. Calculated control value T2 is constantly calculated according to the set temperature and the signals input from the sensors.

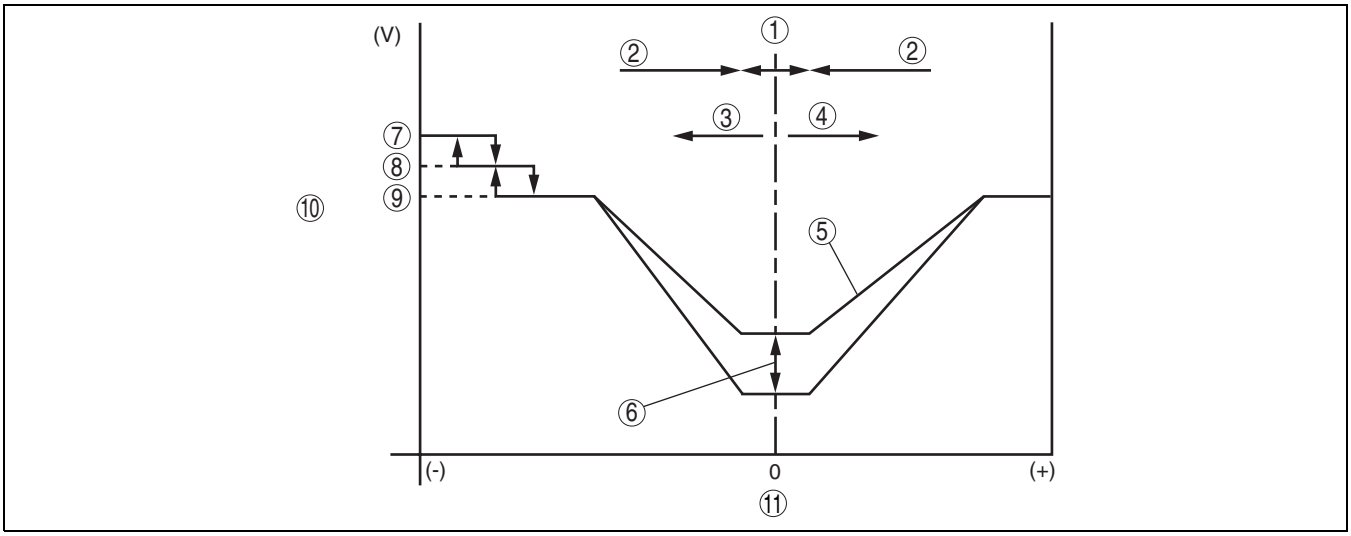

B3E0740T026

1	Stable period
2	Transition period
3	When cooling
4	When heating
5	Blower motor applied voltage characteristic
6	Increases/decreases linearly with sunlight intensity.

7	MAX-HI
8	MIDDLE-HI
9	AUTO-HI
10	Blower motor applied voltage characteristic
11	Calculated control value T2

Correction

Engine coolant temperature correction (warm-up correction)

- Controls the blower motor applied voltage according to the increase in engine coolant temperature to prevent discomfort caused by a high volume of cold air blown from the vents in winter after starting the engine. However, the engine coolant temperature correction is not performed during defroster correction and when the cabin temperature is **20 °C {68 °F} or more**, and the airflow mode is in VENT mode.

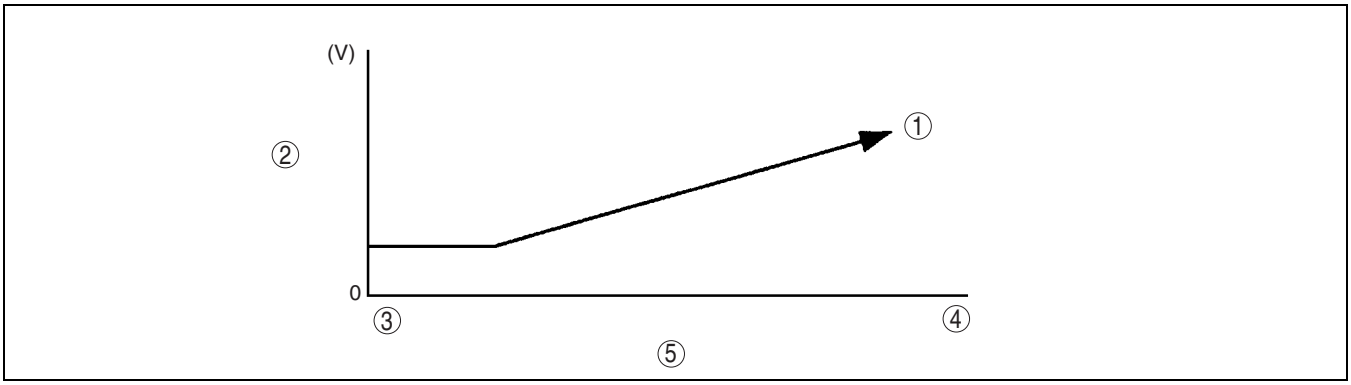

B3E0740T027

1	Rises to auto voltage.
2	Blower motor applied voltage
3	Low

4	High
5	Engine coolant temperature

Vehicle speed correction

- When the air intake mode is at FRESH while driving at high speed, the airflow volume increases due to the wind blowing against the vehicle and air conditioner performance is negatively effected. To prevent this, the blower motor applied voltage is corrected according to the vehicle speed. Also the climate control unit stably performs control even when the vehicle speed is suddenly changed due to braking by delaying the input vehicle speed signal. However, the vehicle speed correction is not performed during airflow volume manual control, defroster correction, start compensation correction, fail-safe function, MAX HOT control and MAX-HI.

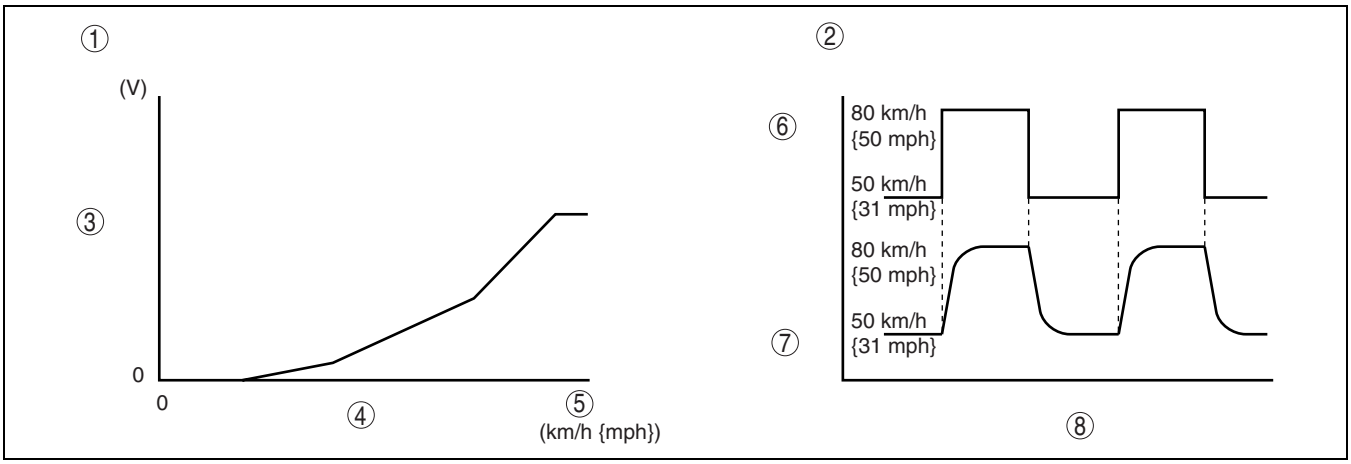

DPE740ZN1A01

1	Vehicle speed correction
2	Vehicle speed delay
3	Blower motor applied voltage correction amount
4	Speed

5	High
6	(Example) Actual vehicle speed variation
7	Delayed vehicle speed determination by climate control unit
8	Time

Mild start correction

- Limits blower motor applied voltage for **3 s** after the blower motor is started in summer to prevent discomfort caused by a high volume of hot air blown from the vent. However, the mild start correction is not performed when the cabin temperature is **20 °C {68 °F} or less** and when the airflow is in any mode other than VENT.

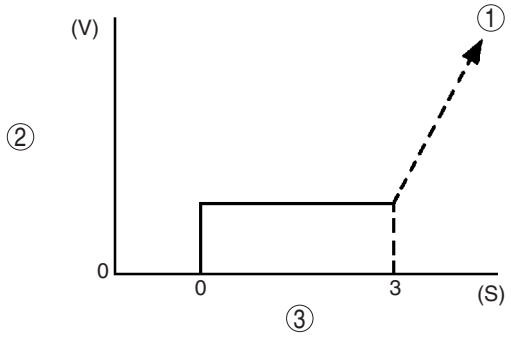

B3E0740T029

1	Rises to auto voltage.
2	Blower motor applied voltage

3	Time

MAX HOT and MAX COLD correction

- When the set temperature is at **29.0**, the blower motor applied voltage is fixed at AUTO-HI, and when the set temperature is at **15.0**, the blower motor applied voltage is fixed at MAX-HI. However, MAX HOT correction is not performed during engine coolant correction.

Correction name	Set temperature	Blower motor applied voltage
MAX HOT correction	29.0	12.1 (V): AUTO-HI
MAX COLD correction	15.0	V_B: MAX-HI

Window fogging prevention correction at start

- Just after engine start, the A/C compressor is not turned on due to PCM A/C cut-off control. As air blows from the defroster when the heater is started, the windows can easily become fogged. To prevent this, blower motor applied voltage is fixed at **0 V** for **6 s** after the ignition switch is turned to the ON position. However, window fogging prevention correction at start is not performed when the airflow mode is in any mode other than HEAT, HEAT/DEF or DEFROSTER.

Starting compensation correction

- When the blower motor is started-up at the lowest speed (**3.2 V**), the blower motor applied voltage is fixed at **4.4 V for 2 s** to stabilize blower motor start-up operation.

Defroster correction

- To improve defrosting of the windows, a correction (**+2 V**) is added to the blower motor applied voltage when the defroster switch is turned on.

Starting burn-out prevention function

- When the blower motor is started-up from the stopped status with a blower motor applied voltage of **4.4 V or more**, the blower motor applied voltage is fixed at **4.4 V for 1 s** to prevent the power MOS FET from burning out due to excessive current.

Airflow Volume Manual Control

- The blower motor applied voltage (airflow volume) can be switched in seven steps with the fan switch.

Fan switch	Blower motor applied voltage
1st	4.4 V
2nd	6.1 V
3rd	7.8 V
4th	9.5 V
5th	10.8 V
6th	12.1 V
7th	B+

AIRFLOW MODE CONTROL OUTLINE

DPE074061195T01

Features

- Consists of the airflow mode automatic and manual controls with the climate control unit controlling the airflow mode via the airflow mode actuator.

AIRFLOW MODE CONTROL SYSTEM DIAGRAM

DPE074061195T03

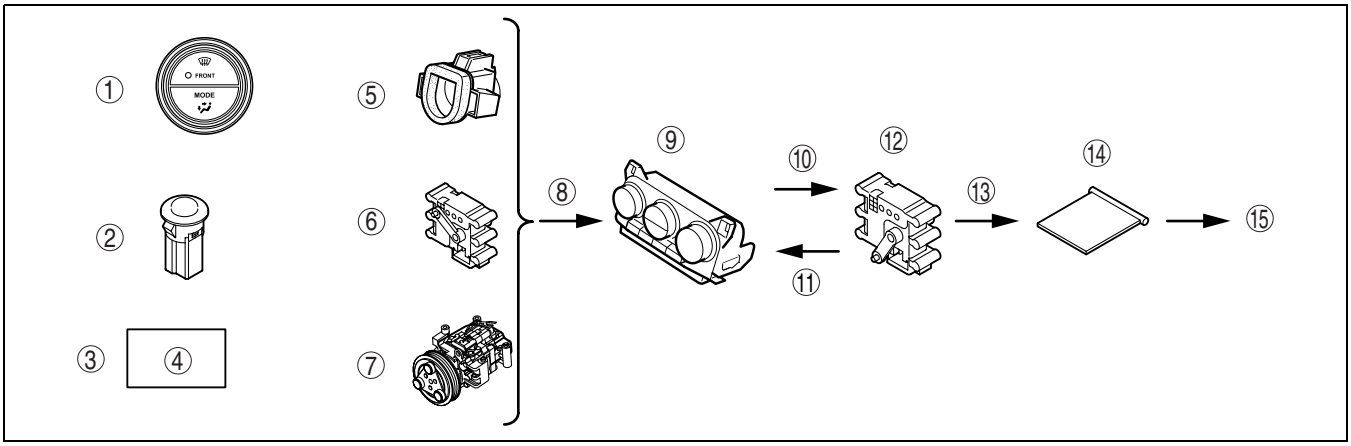

DPE740ZT1108

1	MODE, defroster switchs
2	Solar radiation amount
3	Engine coolant temperature
4	ECT sensor
5	Cabin temperature
6	Air mix actuator temperature opening degree
7	A/C compressor control condition
8	Signal

9	Climate control unit
10	Output
11	Feedback
12	Airflow mode actuator
13	Operation
14	Airflow mode door
15	Airflow mode change

AIRFLOW MODE CONTROL OPERATION

DPE074061195T05

Airflow Mode Automatic Control

- The climate control unit determines the airflow mode based on the current air mix actuator opening angle.

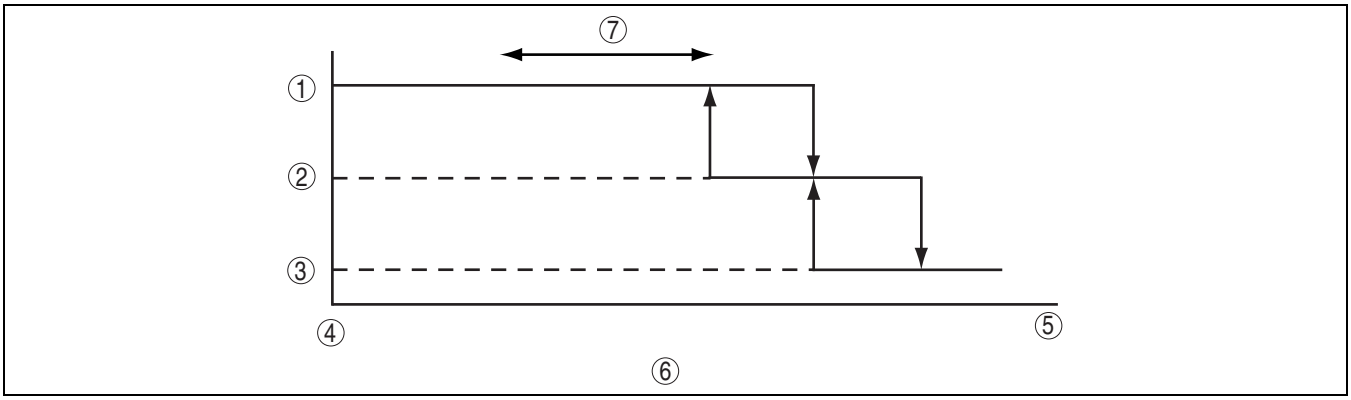

B3E0740T414

1	VENT
2	BI-LEVEL
3	HEAT
4	COLD

5	HOT
6	Air mix actuator opening angle
7	Amount varies.

Correction

Ambient temperature correction

- To improve windshield and door glass from fogging, airflow mode is fixed at HEAT/DEF when the ambient temperature is low. However, ambient temperature correction does not operate when the temperature is set at MAX COLD.

Engine coolant temperature correction (Warm-up correction)

- Switches the airflow mode after the engine is started in winter in accordance with the increase in engine coolant temperature to prevent discomfort caused by cold air blown towards the feet. The engine coolant temperature correction is performed only when the cabin temperature is **13 °C {55 °F} or less**, or the cabin

temperature is **23 °C {73 °F} or less** and sunlight intensity is relatively low.

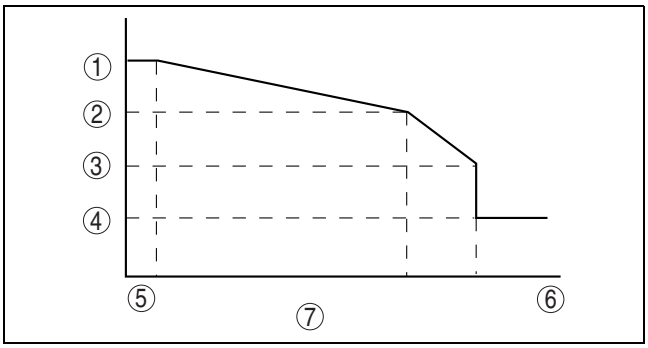

B3E0740T031

1	DEFROSTER
2	HEAT/DEF
3	HEAT
4	AUTO
5	LOW
6	HIGH
7	Engine coolant temperature

Airflow Mode Manual Control

- The airflow modes can be switched by operating the each mode switchs.

Airflow mode	Switch operated	Air vent
VENT	MODE switch	CENTER VENT, SIDE VENT
BI-LEVEL		CENTER VENT, SIDE VENT, FRONT HEAT, REAR HEAT
HEAT		CENTER VENT (L.H.D.) (low volume), SIDE VENT (L.H.D.) (low volume), FRONT HEAT, REAR HEAT, SIDE DEMISTER (low volume), DEFROSTER (low volume)
HEAT/DEF		CENTER VENT (L.H.D.) (low volume), SIDE VENT (L.H.D.) (low volume), FRONT HEAT, REAR HEAT, SIDE DEMISTER, DEFROSTER
DEFROSTER	DEFROSTER switch	CENTER VENT (L.H.D.) (low volume), SIDE VENT (L.H.D.) (low volume), SIDE DEMISTER, DEFROSTER

AIR INTAKE CONTROL OUTLINE

DPE074061203T01

Features

- Consists of the air intake automatic and manual controls with the climate control unit controlling the air intake mode via the air intake actuator.

AIR INTAKE CONTROL SYSTEM DIAGRAM

DPE074061203T02

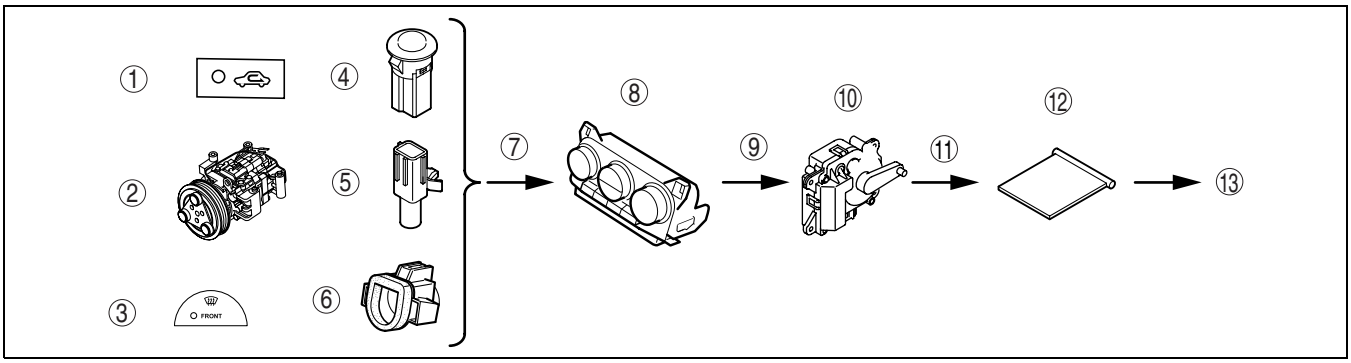

DPE740ZT1109

1	REC switch
2	A/C compressor control condition
3	Defroster switch
4	Solar radiation amount
5	Ambient temperature
6	Cabin temperature

7	Signal
8	Climate control unit
9	Output
10	Air intake actuator
11	Operation
12	Air intake door

13	Air intake mode change

AIR INTAKE CONTROL OPERATION

DPE074061203T03

Air Intake Automatic Control

- The climate control unit calculates the cabin temperature based on the ambient temperature and sunlight intensity in order to cool the cabin temperature quickly according to the cooling conditions. It then compares the calculated cabin temperature and the actual cabin temperature to determine the proper air intake mode.

1	Recirculate
2	Fresh
3	Low
4	High
5	Calculated cabin temperature value
6	Cabin temperature

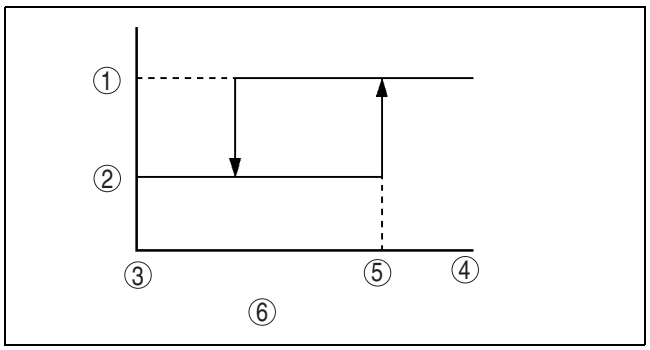

B3E0740T033

Correction

MAX COLD correction

- When the temperature is set to **15.0**, the air intake is set to REC to improve cooling effectiveness. However, the MAX COLD correction is not performed with the defroster correction or during A/C OFF mode.

Defroster correction

- When the DEFROSTER switch is turned on, the air intake is set to FRESH to improve defrosting. The air intake is set to FRESH even if it has been set to REC manually.

Ambient temperature correction

- When the ambient temperature is **5 °C {41 °F} or less**, the air intake is set to FRESH to prevent window fogging.

A/C OFF correction

- Air intake is fixed to FRESH with A/C OFF mode during the air intake automatic control.

Air Intake Manual Control

- The air intake modes can be switched by operating the REC switch.

Air intake mode	REC switch operation
FRESH	Fixed to FRESH when the REC switch is turned on during REC mode.
REC	Fixed to REC when the REC switch is turned on during FRESH mode.

A/C COMPRESSOR CONTROL OUTLINE

DPE074061196T01

Features

- Consists of the A/C compressor automatic and manual controls with the climate control unit outputting the A/C signal to the PCM to control the A/C compressor.
- The PCM controls the A/C relay.

A/C COMPRESSOR CONTROL SYSTEM DIAGRAM

DPE074061196T02

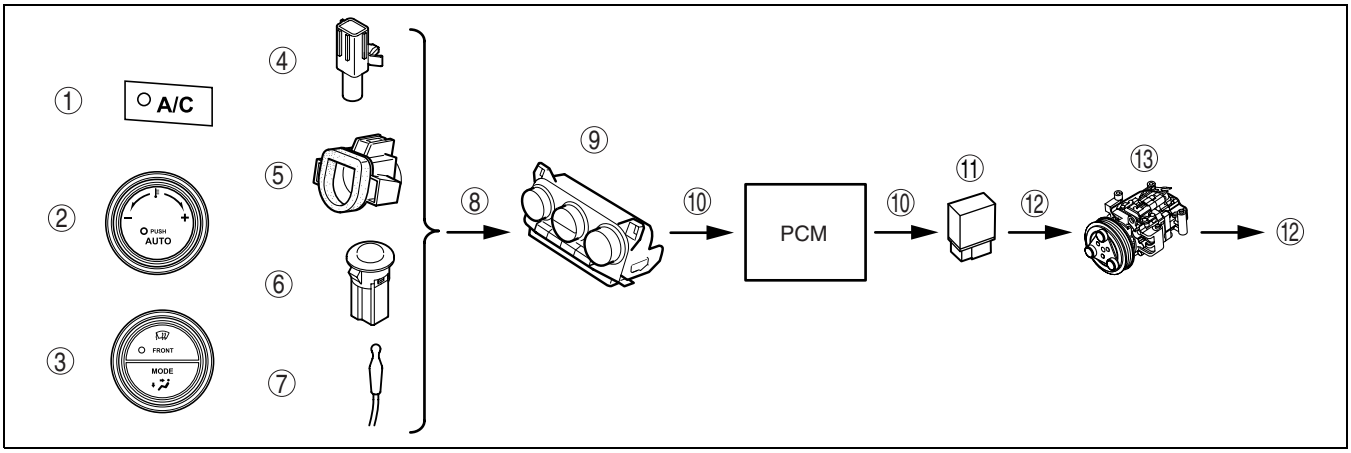

DPE740ZT1110

1	A/C switch
2	Set temperature
3	Mode, defroster switch
4	Ambient temperature
5	Cabin temperature
6	Solar radiation amount
7	Evaporator temperature sensor

8	Signal
9	Climate control unit
10	Output
11	A/C relay
12	Operation
13	Magnetic clutch

A/C COMPRESSOR CONTROL OPERATION

DPE074061196T04

A/C Compressor Automatic Control

- The climate control unit determines A/C ON/OFF mode based on the ambient temperature.
- In A/C ON mode, the A/C signal (magnetic clutch) is turned on/off according to the temperature of the air passing through the evaporator. The temperature of the air passing through the evaporator at which the A/C signal turns off is determined by the ambient temperature calculation value that is calculated based on the ambient temperature, set temperature, cabin temperature, and sunlight intensity. By setting the A/C signal off temperature low when strong cooling performance is needed, such as when the ambient temperature is high, and setting it high in other conditions, cooling comfort and fuel economy during A/C operation are improved.

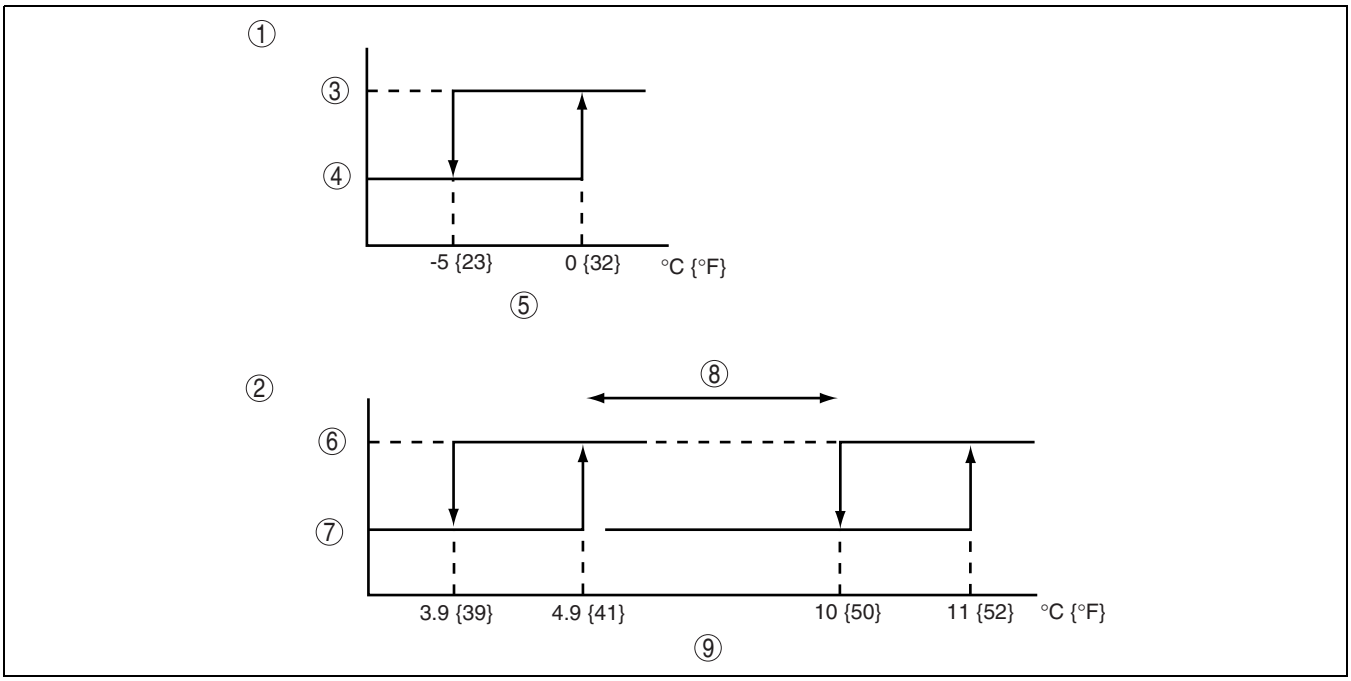

DPE740ZT1111

1	A/C mode (ON, OFF) determination

2	A/C signal (ON, OFF) determination during A/C ON mode
3	A/C ON mode
4	A/C OFF mode
5	Ambient temperature
6	A/C signal ON
7	A/C signal OFF
8	Varies with calculated ambient temperature value.
9	Temperature of air passing through evaporator

Correction

Defroster correction

- When the DEFROSTER switch is turned on, the system is switched to A/C ON mode and the A/C signal on/off temperature is set to **4.9/3.9 °C {41.0/39.0 °F}** to improve defrosting. However, defroster correction is not performed with the ambient temperature correction.

Ambient temperature correction

- When the ambient temperature is **-5 °C {23 °F} or less**, the A/C signal is fixed at OFF to protect the A/C compressor (to prevent A/C compressor fluid from being pressurized). During this operation, manual operation using the A/C switch is not available.

MAX COLD correction

- When the temperature is set to **15.0**, the A/C signal on/off temperature is set to **4.9/3.9 °C {41.0/39.0 °F}**.

Window fogging prevention correction at start

- The A/C compressor does not turn on due to PCM A/C cut-off control just after the engine is started. Therefore, the windshield and front door glass are easily fogged when the heater is turned on and air blows from the defroster. To prevent this, no A/C signal is output from the climate control unit to the PCM **for 6 s** after the ignition switch is turned to the ON position. The window fogging prevention correction at start is not performed when the airflow mode is in any mode other than HEAT, HEAT/DEF, and DEFROSTER during airflow volume automatic control.

A/C Compressor Manual Control

- A/C ON or OFF mode is selected by operating the A/C switch.

A/C mode		Operation condition
A/C ON mode	A/C MODE (A/C display)	Fixed in A/C mode.
A/C OFF mode (No display)		Fixed in A/C OFF mode.

A/C signal ON/OFF determination in A/C mode

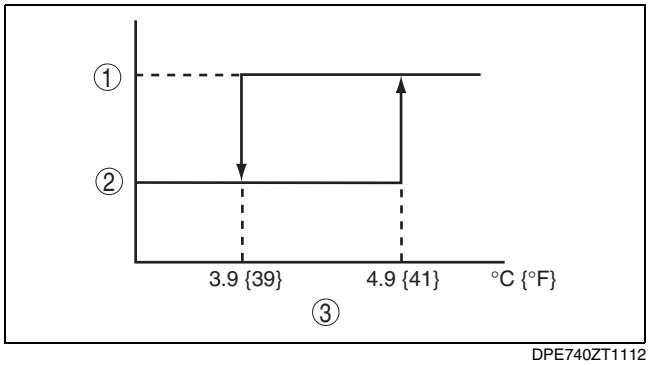

DPE740ZT1112

1	A/C signal ON
2	A/C signal OFF
3	Temperature of air passing through evaporator

CLIMATE CONTROL UNIT CONSTRUCTION [MANUAL AIR CONDITIONER]

DPE074061190T03

- A wire-type climate control unit is used with the manual air conditioner.
- The airflow mode selector dial, temperature control dial, airflow volume control dial have been enlarged to improve ease of operation.

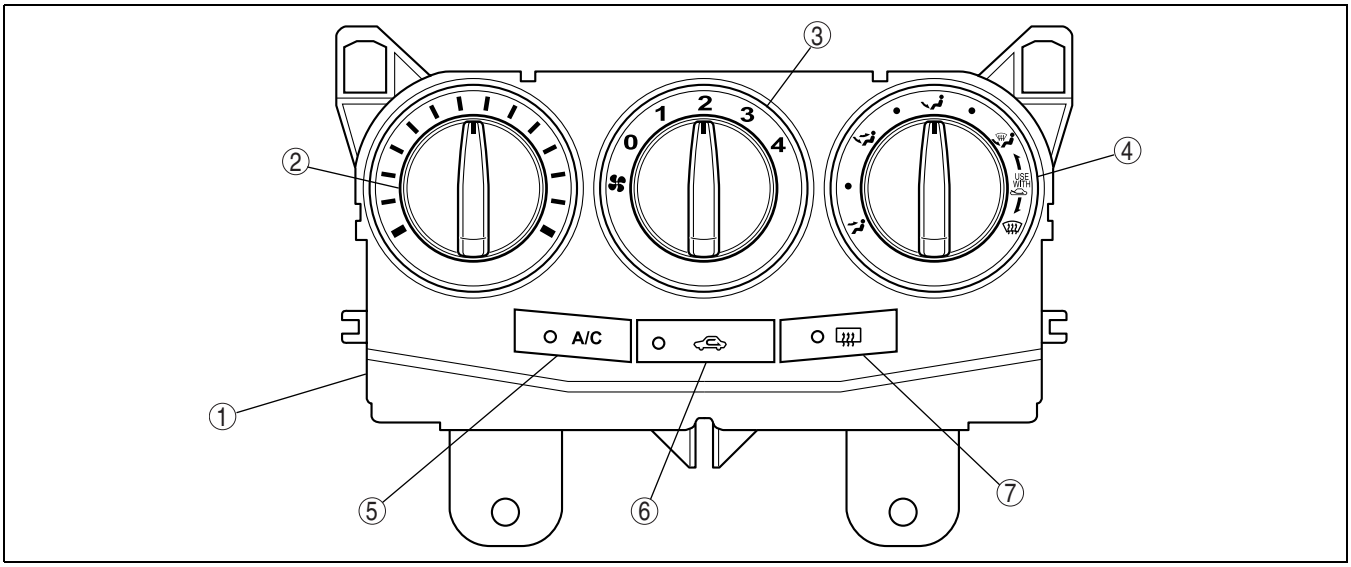

DPE740ZT1113

1	Climate control unit
2	Airflow mode selector dial
3	Airflow volume control dial
4	Temperature control dial

5	A/C switch
6	REC switch
7	Rear window defroster switch

MANUAL AIR CONDITIONER CONTROL SYSTEM

DPE074000005T01

Block Diagram

- The climate control unit performs the defroster control based on the signal sent from the airflow mode selector dial, and sends an operating signal to the air intake actuator.
- The climate control unit sends an A/C signal to the PCM via the BCM and instrument cluster based on signals sent from the A/C switch, fan switch and evaporator temperature sensor.
- The PCM sends operating signals to the A/C relay and IAC valve based on A/C signal and vehicle signal.

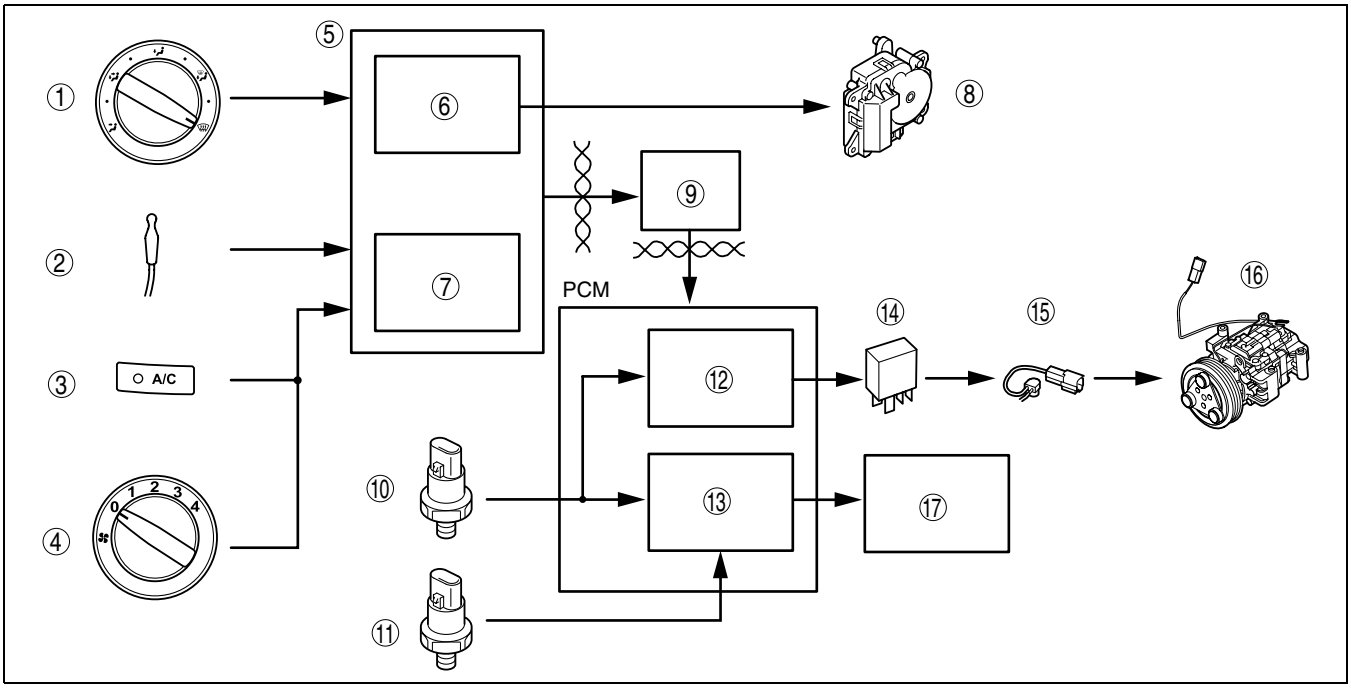

DPE740ZT1006

1	Airflow mode selector switch
2	Evaporator temperature sensor
3	A/C switch

4	Fan switch
5	Climate control unit
6	Defroster control

7	A/C compressor control
8	Air intake actuator
9	BCM and instrument cluster
10	Refrigerant pressure switch (HI and LO pressure)
11	Refrigerant pressure switch (medium pressure)
12	A/C cut-off control
13	Idle air control
14	A/C relay
15	Stator and thermal protector
16	Magnetic clutch
17	IAC valve

Outline of Control System

- Manual air conditioner defroster control and A/C compressor control.

Control name	Control part
Defroster control	Climate control unit
A/C compressor control	Climate control unit

Defroster Control

1. When the airflow mode selector dial is turned to DEFROSTER position, a wire moves the airflow mode main link, turning the airflow mode to DEFROSTER.
2. The defroster switch turns on at the same time, and the CPU sends a signal to turn the air intake mode to FRESH.
3. The air intake actuator operates and turns the air intake mode to FRESH.

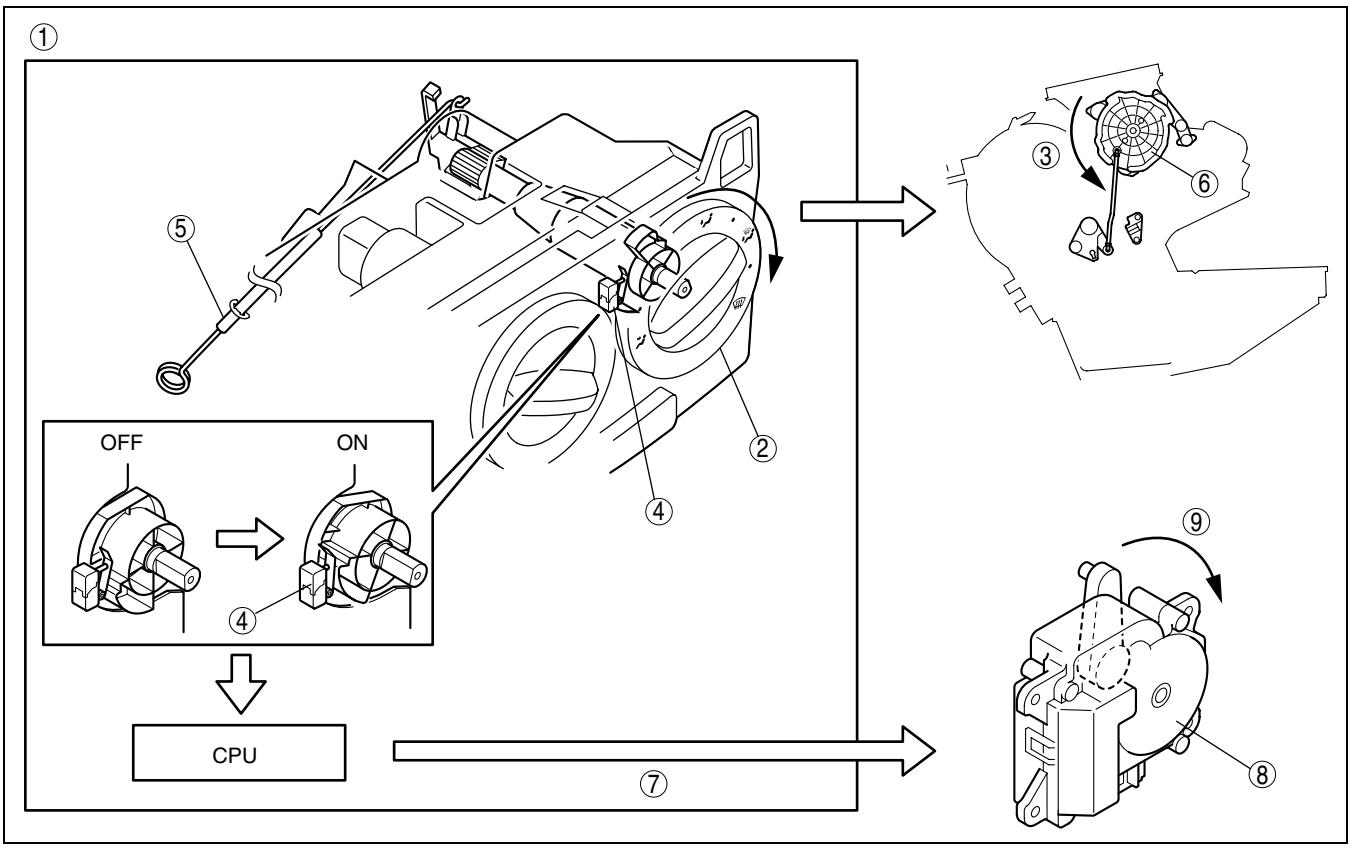

DPE740ZT1007

1	Climate control unit
2	Airflow mode selector dial
3	To DEFROSTER position
4	Defroster switch
5	Wire

6	Airflow mode main link
7	FRESH signal
8	Air intake actuator
9	To FRESH position

X: Operates
–: Does not operate

Airflow mode	Air intake mode (REC switch pushed)	Defroster control
VENT	REC ⇔ FRESH	–
BI-LEVEL	REC ⇔ FRESH	–
HEAT	REC ⇔ FRESH	–
HEAT/DEF	REC ⇔ FRESH	–
DEFROSTER	FRESH	x

A/C Compressor Control

- The climate control unit sends an A/C signal to the PCM via the BCM and instrument cluster based on signals sent from the A/C switch, fan switch and evaporator temperature sensor.
- The PCM controls the A/C relay and IAC valve based on the input signal from the climate control unit and refrigerant pressure switch.

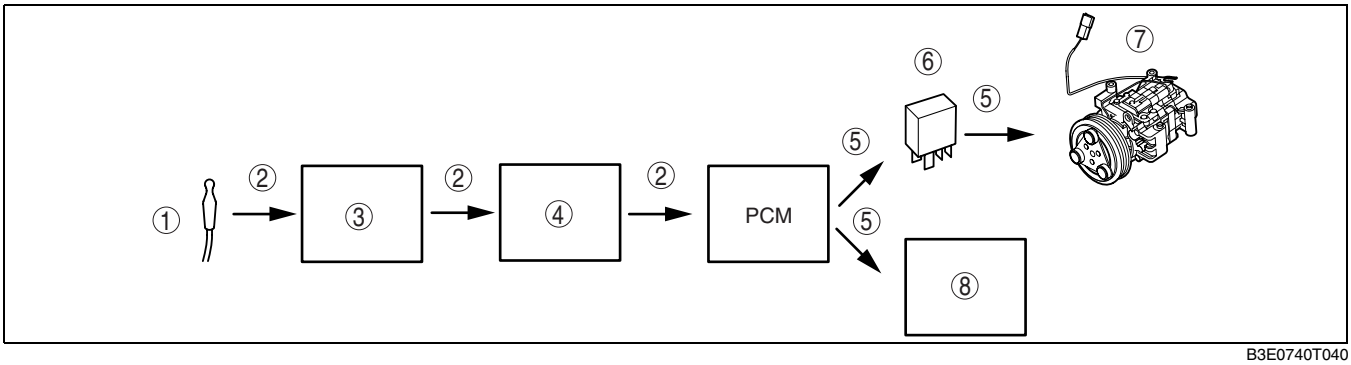

B3E0740T040

1	Evaporator temperature sensor
2	A/C signal
3	Climate control unit
4	BCM and instrument cluster

5	Output
6	A/C relay
7	Magnetic clutch
8	IAC valve

A/C signal on/off control

- The climate control unit turns the A/C signal (magnetic clutch) on and off based on the temperature of the air passing through the evaporator when the A/C and fan switches are on. This keeps the evaporator surface temperature within the specified range, preventing the evaporator from freezing while the fan switch and A/C switch are turned on.

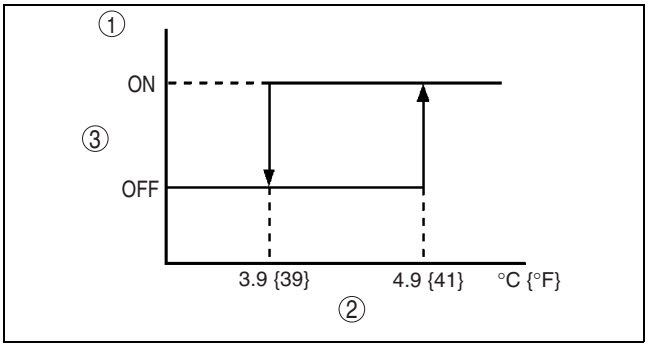

B3E0740T420

1	A/C signal on/off decision
2	Evaporator temperature sensor
3	A/C signal